Dell 2355dn
Service Manual

29 Jul 2010

Information in this document is subject to change without notice.
2010 Dell Inc. All rights reserved.

Reproduction in any manner whatsoever without the written permission of Dell Inc.is strictly forbidden.
Trademarks used in this text: Dell and the DELL logo are trademarks of Dell Inc.

Other trademarks and trade names may be used in this document to refer to the entities claiming the marks and names of their products. Dell Inc. disclaims any proprietary interest in trademarks and trade names other than its own.

Contents

chapter 1 Precautions

1.1 Safety Warning 1-1
1.2 Caution for safety 1-2
1.3 ESD Precautions 1-5
1.4 Super Capacitor or Lithium Battery Precautions 1-5

chapter 2 Product spec and feature

2.1 Product Specifications 2-1
2.1.1 Product Overview 2-1
2.1.2 Product General Specifications 2-2
2.2 System Outline 2-10
2.2.1 System Configurations 2-10

chapter 3 Disassembly and Reassembly

3.1 General Precautions on Disassembly 3-1
3.2 General Disassembly 3-2
3.2.1 Cover 3-2
3.2.2 Fuser-Unit 3-3
3.2.3 Controller Board 3-4
3.2.4 Scanner ASS'Y and DADF Unit 3-5
3.2.5 OPE-Unit 3-6
3.2.6 Cover-Middle and Cover-Exit 3-7
3.2.7 LSU-Unit 3-8
3.2.8 Drive-Unit 3-8
3.2.9 Pick_Up Roller 3-9
3.2.10 SMPS 3-9
3.2.11 HVPS 3-10
3.2.12 Transfer Roller 3-10

Contents

chapter 4 Alignment and Troubleshooting

4.1 Alignment and Adjustments 4-1
4.1.1 Paper path 4-1
4.1.2 Clearing Paper Jams 4-2
4.1.3 Diagnostic Mode 4-17
4.1.4 Consumables and Replacement Parts 4-33
4.2 Troubleshooting 4-34
4.2.1 Procedure of Checking the Symptoms 4-34
4.2.2 Abnormal Image Printing and Defective Roller 4-35
4.2.3 Solution 4-39

chapter 5 System Diagram

5.1 Block Diagram 5-1
5.2 Connection Diagram 5-2

chapter 6 Reference Information

6.1 Tool for Troubleshooting 6-1
6.2 Acronyms and Abbreviations 6-2
6.3 A4 ISO 19752 Standard Pattern 6-3

attached Parts Catalog

1. Precautions

In order to prevent accidents and to prevent damage to the equipment please read the precautions listed below carefully before servicing the printer and follow them closely.

1.1 Safety Warning

(1) Only to be serviced by appropriately qualified service engineers.
High voltages and lasers inside this product are dangerous. This printer should only be serviced by a suitably trained and qualified service engineer.

(2) Use only Dell replacement parts
There are no user serviceable parts inside the printer. Do not make any unauthorized changes or additions to the printer, these could cause the printer to malfunction and create electric shock or fire hazards.

(3) Laser Safety Statement
The Printer is certified in the U.S. to conform to the requirements of DHHS 21 CFR, chapter 1 Subchapter J for Class 1(1) laser products, and elsewhere, it is certified as a Class I laser product con-forming to the requirements of IEC 825. Class I laser products are not considered to be hazardous. The laser system and printer are designed so there is never any human access to laser radiation above a Class I level during normal operation, user maintenance, or prescribed service condition.

Warning >> Never operate or service the printer with the protective cover removed from Laser/ Scanner assembly. The reflected beam, although invisible, can damage your eyes. When using this product, these basic safety pre-cautions should always be followed to reduce risk of fire, electric shock, and injury to persons.

1.2 Caution for safety

1.2.1 Toxic material

This product contains toxic materials that could cause illness if ingested.

(1) If the LCD control panel is damaged it is possible for the liquid inside to leak. This liquid is toxic. Contact with the skin should be avoided, wash any splashes from eyes or skin immediately and contact your doctor. If the liquid gets into the mouth or is swallowed see a doctor immediately.
(2) Please keep Drum cartridge and Toner Cartridge away from children. The toner powder contained in the Drum cartridge and Toner Cartridge may be harmful and if swallowed you should contact a doctor.

1.2.2 Electric Shock and Fire Safety Precautions

Failure to follow the following instructions could cause electric shock or potentially cause a fire.

(1) Use only the correct voltage, failure to do so could damage the printer and potentially cause a fire or electric shock.
(2) Use only the power cable supplied with the printer. Use of an incorrectly specified cable could cause the cable to overheat and potentially cause a fire.
(3) Do not overload the power socket, this could lead to overheating of the cables inside the wall and could lead to a fire.
(4) Do not allow water or other liquids to spill into the printer, this can cause electric shock. Do not allow paper clips, pins or other foreign objects to fall into the printer these could cause a short circuit leading to an electric shock or fire hazard.
(5) Never touch the plugs on either end of the power cable with wet hands, this can cause electric shock. When servicing the printer remove the power plug from the wall socket.
(6) Use caution when inserting or removing the power connector. The power connector must be inserted completely otherwise a poor contact could cause overheating possibly leading to a fire. When removing the power connector grip it firmly and pull.
(7) Take care of the power cable. Do not allow it to become twisted, bent sharply round corners or other wise damaged. Do not place objects on top of the power cable. If the power cable is damaged it could overheat and cause a fire or exposed cables could cause an electric shock. Replace a damaged power cable immediately, do not reuse or repair the damaged cable. Some chemicals can attack the coating on the power cable, weakening the cover or exposing cables causing fire and shock risks.
(8) Ensure that the power sockets and plugs are not cracked or broken in any way. Any such defects should be repaired immediately. Take care not to cut or damage the power cable or plugs when moving the machine.
(9) Use caution during thunder or lightening storms. Dell recommend that this machine be disconnected from the power source when such weather conditions are expected. Do not touch the machine or the power cord if it is still connected to the wall socket in these weather conditions.
(10) Avoid damp or dusty areas, install the printer in a clean well ventilated location. Do not position the machine near a humidifier. Damp and dust build up inside the machine can lead to overheating and cause a fire.
(11) Do not position the printer in direct sunlight. This will cause the temperature inside the printer to rise possibly leading to the printer failing to work properly and in extreme conditions could lead to a fire.
(12) Do not insert any metal objects into the machine through the ventilator fan or other part of the casing, it could make contact with a high voltage conductor inside the machine and cause an electric shock.

1.2.3 Handling Precautions

The following instructions are for your own personal safety, to avoid injury and so as not to damage the printer

(1) Ensure the printer is installed on a level surface, capable of supporting its weight. Failure to do so could cause the printer to tip or fall.
(2) The printer contains many rollers, gears and fans. Take great care to ensure that you do not catch your fingers, hair or clothing in any of these rotating devices.
(3) Do not place any small metal objects, containers of water, chemicals or other liquids close to the printer which if spilled could get into the machine and cause damage or a shock or fire hazard.
(4) Do not install the machine in areas with high dust or moisture levels, beside on open window or close to a humidifier or heater. Damage could be caused to the printer in such areas.
(5) Do not place candles, burning cigarettes, etc on the printer, These could cause a fire.

1.2.4 Assembly / Disassembly Precautions

Replace parts carefully, always use Dell parts. Take care to note the exact location of parts and also cable routing before dismantling any part of the machine. Ensure all parts and cables are replaced correctly. Please carry out the following procedures before dismantling the printer or replacing any parts.

(1) Check the contents of the machine memory and make a note of any user settings. These will be erased if the mainboard or network card is replaced.
(2) Ensure that power is disconnected before servicing or replacing any electrical parts.
(3) Disconnect printer interface cables and power cables.
(4) Only use approved spare parts. Ensure that part number, product name, any voltage, current or temperature rating are correct.
(5) When removing or re-fitting any parts do not use excessive force, especially when fitting screws into plastic.
(6) Take care not to drop any small parts into the machine.
(7) Handling of the OPC Drum
- The OPC Drum can be irreparably damaged if it exposed to light.
  Take care not to expose the OPC Drum either to direct sunlight or to fluorescent or incandescent room lighting. Exposure for as little as 5 mins can damage the surface? photoconductive properties and will result in print quality degradation. Take extra care when servicing the printer. Remove the OPC Drum and store it in a black bag or other lightproof container. Take care when working with the covers(especially the top cover) open as light is admitted to the OPC area and can damage the OPC Drum.
- Take care not to scratch the green surface of OPC Drum Unit.
  If the green surface of the Drum Cartridge is scratched or touched the print quality will be compromised.

1.2.5 Disregarding this warning may cause bodily injury

(1) Be careful with the high temperature part.
The fuser unit works at a high temperature. Use caution when working on the printer. Wait for the fuser to cool down before disassembly.

(2) Do not put finger or hair into the rotating parts.
When operating a printer, do not put hand or hair into the rotating parts (Paper feeding entrance, motor, fan, etc.). If do, you can get harm.

(3) When you move the printer
This printer weighs 17.7 kg including toner cartridge and cassette. Use safe lifting and handling techniques. Use the lifting handles located on each side of the machine. Back injury could be caused if you do not lift carefully.

(4) Ensure the printer is installed safely.
The printer weighs 17.7 kg, ensure the printer is installed on a level surface, capable of supporting its weight. Failure to do so could cause the printer to tip or fall possibly causing personal injury or damaging the printer.

(5) Do not install the printer on a sloping or unstable surface. After installation, double check that the printer is stable.

1.3 ESD Precautions

Certain semiconductor devices can be easily damaged by static electricity. Such components are commonly called “Electrostatically Sensitive (ES) Devices” or ESDs. Examples of typical ESDs are: integrated circuits, some field effect transistors, and semiconductor “chip” components.
The techniques outlined below should be followed to help reduce the incidence of component damage caused by static electricity.

Caution >>Be sure no power is applied to the chassis or circuit, and observe all other safety precautions.

1. Immediately before handling a semiconductor component or semiconductor-equipped assembly, drain off any electrostatic charge on your body by touching a known earth ground. Alternatively, employ a commercially available wrist strap device, which should be removed for your personal safety reasons prior to applying power to the unit under test.
2. After removing an electrical assembly equipped with ESDs, place the assembly on a conductive surface, such as aluminum or copper foil, or conductive foam, to prevent electrostatic charge buildup in the vicinity of the assembly.
3. Use only a grounded tip soldering iron to solder or desolder ESDs.
4. Use only an “anti-static” solder removal device. Some solder removal devices not classified as “anti-static” can generate electrical charges sufficient to damage ESDs.
5. Do not use Freon-propelled chemicals. When sprayed, these can generate electrical charges sufficient to damage ESDs.
6. Do not remove a replacement ESD from its protective packaging until immediately before installing it. Most replacement ESDs are packaged with all leads shorted together by conductive foam, aluminum foil, or a comparable conductive material.
7. Immediately before removing the protective shorting material from the leads of a replacement ESD, touch the protective material to the chassis or circuit assembly into which the device will be installed.
8. Maintain continuous electrical contact between the ESD and the assembly into which it will be installed, until completely plugged or soldered into the circuit.
9. Minimize bodily motions when handling unpackaged replacement ESDs. Normal motions, such as the brushing together of clothing fabric and lifting one’s foot from a carpeted floor, can generate static electricity sufficient to damage an ESD.

1.4 Super Capacitor or Lithium Battery Precautions

1. Exercise caution when replacing a super capacitor or Lithium battery. There could be a danger of explosion and subsequent operator injury and/or equipment damage if incorrectly installed.

2. Be sure to replace the battery with the same or equivalent type recommended by the manufacturer.

3. Super capacitor or Lithium batteries contain toxic substances and should not be opened, crushed, or burned for disposal.

4. Dispose of used batteries according to the manufacture’s instructions.

2. Product spec and feature

2.1 Product Specifications

2.1.1 Product Overview

Concept	Excellent Solution for Office Device (Fast, Durable, Versatile)
Target	Small Workgroup or Single User
Feature	※ General - 35 ppm Print/Copy Speed - 1200 dpi Print/Copy Resolution - 256MB System Memory - 50 sh DADF - 250 sh Input / 150 sh Output ※ Option - 250 sh SCF - 802.11 b/g Wireless Lan

2.1.2 Product General Specifications

Item			DELL Laser MFP 2355dn	Remarks
General	Major Features		Fax, Copier, Print, Scan, DADF, N/W Print, Scan to USB Key	
	Size (W*D*H) w/o Hand Set		465.2mmx 463.5mmx460.3mm (18.3”x18.2”x18.1”)	
	Net Weight(Inc. Toner Cartridge)		20 Kg	
	Net Weight(exc. Toner Cartridge)		18.8 Kg	
	Gross Weight(with package)		23 Kg	
	LCD		4.3 inch touch screen panel	back light
	I/O Interface		USB2.0 (High Speed)	
	MPU		Chorus-3 / 360MHz	System Bus 120MHz
Power Consumption	Printing Operation		600Wh	EPA
	Sleep Mode		18Wh	EPA
	Power Switch		Yes	
Power Supply	Input Voltage		Low Voltage : 110 ~ 127VAC, 6.5A	
			High Voltage : 220 ~ 240VAC, 3.5A	
	Input Frequency		50 / 60Hz(+/- 3Hz)	
Noise	Printing		52dBA	
	Copy		54dBA	
	Standby		30dBA	
Warm Up Time	from Sleep Status		Less than 20 seconds	
Machine Life	Max. Monthly Volume (Duty Cycle)	Print	35,000 pages	
		Scan	1,000 pages	
		DADF	1,000 pages	
	Average Monthly Print Volume		2,000 pages	
	Machine Life		200,000 pages or 5 years whichever comes first	
Periodic Replacing Parts	Pickup Roller		150,000 Pages	
	Pad Unit (Tray)		100,000 Pages	Dell confirm 100,000 Pages reliability.
	Pad Unit (DADF)		50,000 Pages	DADF Pick-up Roller : 80K
	Transfer Roller		70,000 Pages	
	Fuser Unit		80,000 Pages	
Environmental	Temperature	Operating	10~32℃	
		Non Operating	-20~40℃	

Item			DELL Laser MFP 2355dn	Remarks
Environmental (Continued)	Humidity	Operating	20~80%	
		Non Operating	10~90%	
	Altitude		Max 8,200ft	
EMI Approval			Class B	
Device Memory	Standard / Max.		256MB / 512MB(Std./Max)	
	Type		DDR2	
	Expand Memory Slot, Type		DDR2 SDRAM DIMM	A general personal computer memory will not work. Do not use PC memory.
	Compression Technology		YES	
PRINT	Print Speed	Simplex	35ppm/Ltr, 33ppm/A4 (600 dpi)	
		Duplex	18ipm/Ltr, 17ipm/A4(600dpi)	Usable paper sizes (Letter, A4,Folio,Oficio,Legal)
	Print Emulation		PCL6, PCL5e PostScript Level3(Clone)	
	Auto Emulation Sensing		YES	
	Font	Type	136 scalable PS3 fonts 93 scalable, including OCR-A, OCR-B; 1 bitmapped PCL Font	Refer to the attached file.
		Number	Yes	
	Power Save		Yes (5/10/15/30/60/120 min)	
	Resolution	Normal	600x600dpi (1200x1200)	
		RET	No	
	Toner Save		No	
	FPOT	From Stand by	Approx. 8.5 seconds (From LSU 'ON')	
		From Sleep Status	Less than 24 seconds	
	Duplex Print		Yes	
	Printable Area		208 x 273 mm (Letter)	
	Halftone(Gray Scale)		256levels	

Item			DELL Laser MFP 2355dn	Remarks
SCAN	Scan Method		Color CCD	
	Scan Speed through DADF	Linearity	Approx. 15sec (USB 2.0)	USB 2.0, 300dpi, Letter Size, Pentium 4 2.XGHz,
		Gray	Approx. 20sec (USB 2.0)	128MB RAM
		Color	Approx. 30sec (USB 2.0)	
	Scan Speed through Platen	Linearity	Approx. 15sec (USB 2.0)	
		Gray	Approx. 20sec (USB 2.0)	
		Color 75dpi/300dpi	Approx. 30sec (USB 2.0)	
	Resolution	Optical	600*600dpi	75, 300, 600dpi horizontal
		Enhanced	4800dpi*4800dpi	
	Halftone		256level	for only optical resolution
	Scan Size	Max. Document Width	Max.216mm(8.5")	
		Effective Scan Width	Max 208mm(8.2inch)	
	Scan-to		Scan to Application/Network/Email/USB Key	
	Scan To Email Locations		399 locations in the Directory with Search, Edit and Store facilities	
	Scan Depth	Color	24 bit	
		Mono	1bit for Lineart, 8 Bit for Gray scale	
COPY	Copy Quality Selection or Original Image type selection Mode	Text	300x300 dpi (DADF), 600x600 dpi (Platen)	
		Text/Photo	300x300 dpi (DADF), 600x600 dpi (Platen)	
		Photo	300x300 dpi (DADF), 600x600 dpi (Platen)	
	FCOT	Stand by	Approx. 8.5 seconds :Platen Approx. 15 seconds :DADF	
		From Sleep Status	40 seconds	
	Copy Speed / Letter	SDMC at all mode	35cpm/Ltr, 33cpm/A4	SDMC: Single Document Multiple Copy MDSC: Multi-document Single Copy
		MDSC at Text, Text/Photo, Photo	21 cpm/Ltr, 20 cpm/A4 (Simplex) 7 cpm/Ltr, 6 cpm/A4 (Duplex)	
	Origin Alignment	Platen	REAR LEFT	
		DADF	Center	

Item			DELL Laser MFP 2355dn	Remarks
COPY (Continued)	Zoom Range		25% to 400% for Platen 25% to 100% for DADF	
	Number of Copies		1~199	
	Preset		Yes	
	Contrast Levels		5 level	
	Copy Mode(=Quality)		Text, Text/Photo, Photo	
	Collation Copy		Yes	
	Auto return to default mode		Yes	Time can be changeable ; 15,30,60,180sec, Off
	Changeable Default mode		Contrast, Image, Reduce/Enlarge, No. of Copies	
	Special Copy	N-up copy	2-up, 4-up (DADF only)	
		Collation Copy	Yes (DADF only)	
		Auto Fit Copy	Yes(Platen only)	
		ID Copy	Yes(Platen only)	* Copy 2-side printed original document into one page(ex. ID Card Copy)
		Clone	Yes(Platen only)	
		Poster	Yes(Platen only)	
TELEPHONE	Handset		No	
	On hook Dial *		Yes	
	Search *		Yes(Phone Book)	by using Phone Book Button(Same as Rocky)
	1-Touch Dial *		No	
	Speed Dial *		400 locations(00~399)	Total locations can be stored
	TAD I/F		Yes	
	Tone/Pulse		Selectable in Technical Mode	
	Pause		Yes	
	Auto Redial		Yes	
	Last Number Redial		Yes	
	Distinctive Ring		Yes	
	Caller ID		No	
	External Phone Interface		Yes	
	Report & List Print out	Tx/Rx Journal	Yes	
		Confirmation	Yes	
		Help List	No	
		Auto Dial List	Yes	

Item			DELL Laser MFP 2355dn	Remarks
TELEPHONE (Continued)		System Data List	Yes	
	Sound Control	Ring Volume	Yes(Off, Low, MED, HIGH)	
		Key Volume	Yes(On, Off)	
		Alarm Volume	Yes(On, Off)	
		OHD Volume	Yes	7 steps adjustable
		Speaker	Yes(On, Off, Comm.)	
Fax	Compatibility		ITU-T G3	
	Communication System		PSTN/PABX	
	Modem Speed		33.6Kbps	
	TX Speed		3sec	LRT/MMR/CCITT No.1 Chart/33.6Kbps
	Compression		MH/MR/MMR/JPEG/JBIG	
	Color Fax		Yes(Sending Only)	
	ECM		Yes	
	Resolution	Std	203*98dpi	
		Fine	203*196dpi	
		S.Fine	300*300dpi	
	Scan Speed(DADF)	Std	2.5 sec/ LTR	
		Fine/S.Fine	5 sec/ LTR	
	Changeable Default mode		Darkness, Original Type, Reduce/Enlarge, No. Of Copies	
	Rx fax duplex print out		Yes	
	Multiple page scan speed		21 ppm/LTR, Std mode	203×98dpi, ITU-T #1
	Receive Mode		Fax, TEL, Ans/Fax(DRPD)	
	Memory	Capacity	4MB	
		Optional Memory	No	
		Max locations to store to 1 Group Dial	399 locations	
		Fax Forward	Yes(On/Off)	
		Broadcasting	up to 409 locations	
		Cover page	Yes	
		Delayed fax	Yes	
		Fax Forward to Email Addresses	Yes (Enable / Disable),max 10 locations	
		Memory RX	Yes	
	Functions	Voice Request	No	
		TTI	Yes	

Item			DELL Laser MFP 2355dn	Remarks
Fax (Continued)		RTI	Yes	
		Polling	No	
		Earth/Recall	No	
		Auto Reduction	Yes	
		F/W Remote upgrade	Yes	
	Junk Fax barrier		Yes	
	Secure Receive		Yes	
	Memory Back-up		Yes (Flash ROM)	
Network	Option		Wired(Default), Wireless (Optional)	
	Protocol		SPX/IPX, TCP/IP, Ethertalk, SNMP, HTTP 1.1	
	Operating System		MS Windows 2000/XP/2003/Vista/2008, MAC (English only, no status monitor, web download only) Linux: Red Hat 8.0~9.0, Fedora Core 1~3, Mandrake 9.0~10.2, SuSE 8.2~9.2. Netware 4.x	
Paper Handling	Capacity (20lbs)	Main Tray	250sheets	
		Bypass	50 Sheets	
	Optional Cassette		250sheets	
	Output Capacity		Face Down: 150Sheets/20lb	5 sheets for OHP, Label, Cut Sheet and Envelope
			Face Up: 1Sheet	Mainly for Envelope and Thick Paper
	Output Control		Face Up/Down controlled manually by opening rear cover	
	Paper Size	Main Tray	A4,Letter,Legal,Folio, Executive, B5	
		Bypass	Bypass:Envelope6 3/4,7 3/4,#9, #10,DL,C5,B5	
	Paper Weight	Main Tray	16~24 lb.	
		Bypass	16~43 lb.	
	Paper Path	Standard output	Bottom to Middle Front (FIFO)	
		Straight Through	Face up, Single Sheet	
	Paper Size	Max	216 x 356mm(8.5"x14")	
		Min	76 x 127mm(3"x5")	
	DADF	Paper Weight	12.5~28lb	
		Capacity	50 sheets	

Item			DELL Laser MFP 2355dn	Remarks
Paper Handling (Continued)		Document Size Width	142mm - 216mm(5.6" - 8.5")	
		Document Size Length	148 mm - 356mm(5.8" - 14.0")	
		Document Thickness	0.075mm – 0.13mm(0.003” – 0.005”)	
	Jam Rate	Cassette,	1/4000, Duplex(2500)	*In H/H and L/L condition, the spec. of JAM rate, Mis-pickup rate and Multi-Feed rate are doubled.
		2nd Feeder		Cassette : Jam:1/2000, Double Feed : 1/1000
		DADF	1/1000, Duplex(1/500)	
	Multi-Feed Rate	Cassette, 2nd Feeder	1/2000,	
		DADF	1/1000	
	Printing Skew	Top	±1.5/177.8mm (1st Tray) ±2.5/177.8mm (2nd Tray) ±2.5/177.8mm (Duplex)	
		Side	±2/241.3mm (1st Tray) ±2.5/241.3mm (2nd Tray) ±2.5/241.3mm (Duplex)	
	Copy Skew	Top	±3.0/190mm	
		Side	±3.0/277mm (Simplex & Tray1/MP) ±3.5/277mm (Duplex, Tray2)	
Software	Compatibility	DOS	No	
		Win 3.x	No	
		Win 95	No	
		Win 98	No	
		Win ME	No	
		Win NT 4.0	No	
		Win 2000	Yes	
		Win 2003	Yes	Including 64bits
		Win XP	Yes	Including 64bits
		Win Vista	Yes	Including 64bits
		Win 2008	No	Including 64bits
		Mac	Yes, English only web version	
		Linux	Yes, English only	
	WHQL	MFP	Yes for XP,2003,Vista,2008	

Item			DELL Laser MFP 2355dn	Remarks
Software (Continued)	Driver	Printer	PCL6, PostScript Level3(Std.)	
		TWAIN	Yes	
		WIA	Yes	
		PSU	Yes	
		PC-FAX	Yes	PC fax including to network fax
Consumables	Type		One Piece Type Toner Cartridge	
	How to install		Front door open and front loading	
	Toner	Life	Initial 3Kpages (5% ISO 19752Test Pattern) running Standard: 3Kpages High yield: 6 K pages	
		Level Sensor	No	
	Toner Count		Yes (Dot Counter)	
Quality Target	MTBF		14 months at Recommended Duty Cycle	
	MPBF		30,000 pages	
	MTTR		30 Minutes	
	UMR		33.350 Per million pages	

2.2 System Outline

This document is the product specification for Dell 2135dn. Dell 2135dn is a Multi-Function Peripheral (MFP) integrating a plain fax, a B/W laser printer, a color flatbed scanner, and a B/W copier. Dell 2135dn is developed for small workgroup and personal office customers. The main product concept is “High Speed and High Quality.” This model has 27ppm print-speed, 3 sec transmission-speed for fax, 33.6kbps fax-transfer rate, optical 600 dpi color scanner, and 1200 dpi printer.

Dell 2135dn is developed to meet standard approvals of FCC Part 15 Class B, FCC Part 68, IC 60950, and cUL for the US and Canada. Other markets covered are Europe, Latin America and Emerging Markets. Agency Certifications will be attained to enable launch in all target markets

2.2.1 System Configurations

DELL LASER MFP 2355dn is made up of the Main Control part, Operation Panel part, Scanner part, Line Interface part and Power part. Each Part is a separate Module which focuses on common and standard design of different kind products. Main control part adopting Fax & LBP Printer exclusive Controller is composed of 1 CPU and 1 Board. Scanner part is composed of DADF and Platen and is connected with Main by Harness. Line Interface part is designed to apply TBR21 standard (Domestic, Europe, etc.)

2.2.1.1 CPU Part

1) CPU : ARM926EJS CORE, which is exclusive controller to execute Printer & FAX Function and to execute operation block by flash memory within system program, and to control whole system.
   · Main function block
   · Completely Integrated System for Embedded Applications
   · Operation Frequency : CPU Core -> over 360MHz, System Bus -> 120MHz
   · Operation Voltage : Core Voltage -> 1.0V, I/O Pad Voltage -> 3.3V, RTC Voltage -> 2.5V

2) Flash Memory : Record System Program, and download System Program by PC INTERFACE. FAX for Journal List, and Memory for One Touch Dial, Speed Dial List.
   - size : 32M Byte (NOR Flash), 1M Byte (NOR Flash), 4M Byte (Serial Flash)
   - Access Time: 90ns (Max)
   - Page Access Time: 25ns (Max)

3) SDRAM : is used as Swath Buffer in Printing, Scan Buffer in Scanning, ECM Buffer in FAX receiving, and System Working Memory Area (DDR2 DIMM)
   - size : 256M Byte(Default)
     512M Byte(Option)
   - Max Frequency : 166MHz

2.2.1.2 FAX Section

1) Modem Part

BLOCK DIAGRAM

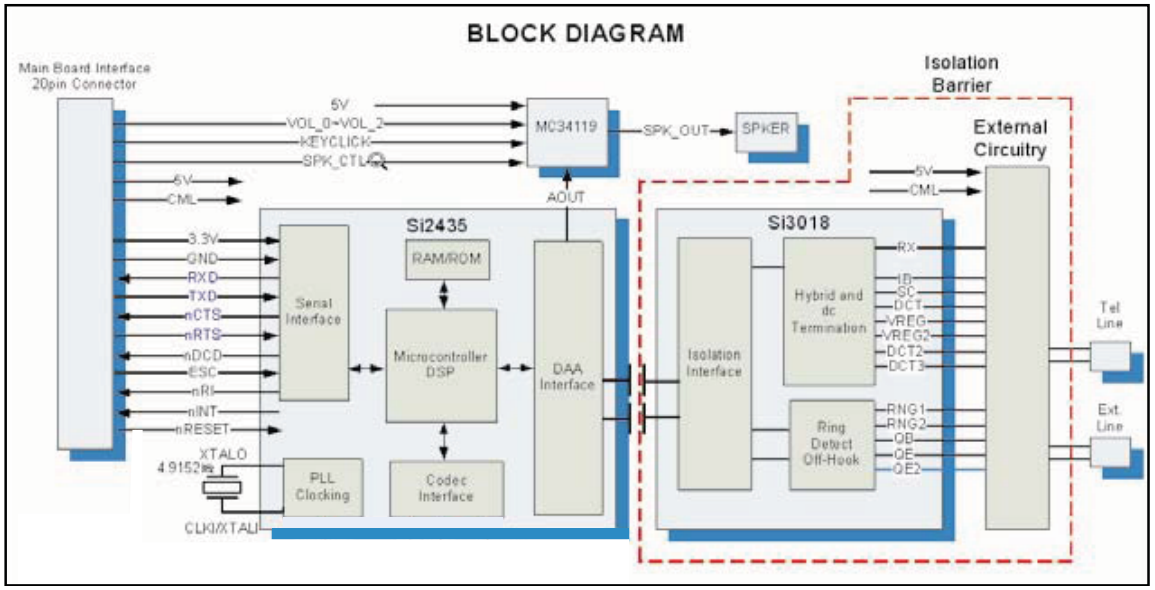

Implemented by based on Silab DAA (Data Access Arrangement) Solution, and is roughly composed of two kinds Chip Solution

- Si2435 (SSD) : Existing Modem Chip which adds SSD (System Side Device) for interfacing between LSD

- Si3018 (LSD) : LIU (Line Interface Unit) Chip which is controlled by SSD and satisfies each PSTN Requirements by modulating internal Configuration with connecting Tel Line.

Signal Transition of DAA Solution

1) Line Interface Signal of Tel Line and LSD is Analog Signal.

2) there is A/D, D/A Converter in LSD, so Analog Signal from Tel Line is converted in Digital through A/D Converter in DAA and transfer to SSD by DIB Capacitor Digital Signal from SSD is converted to Analog by D/A Converter in DAA and transfer to Tel Line

3) Transformer transfer Clock from SSD to LSD and Clock Frequency is 4.032MHz.
LSD full wave rectifies Clock to use as inner Power supply and also use as Main Clock for DIB Protocol Sync between LSD and SSD. Transformer transfer Clock by separating Primary and Secondary, and amplifies Clock Level to LSD by Coil Turns Ratio 1:1.16.

■ Clock

- Clock is supplied by transformer from SSD to LSD, and there is PWROUT to adjust output impedance of Clock

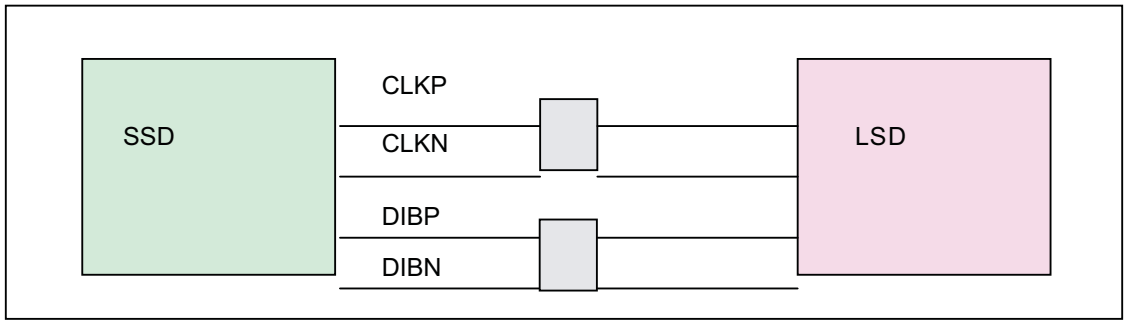

Out Driver is inside SSD and CLKSHIGH Resistor to adjust duty of HLPWR Resistor and Clock.

Clock from SSD to LSD has Differential structure of 180 phase difference for Noise Robustness DIB Data transfer Data from SSD to LSD by Transformer, and also transfer specific data from LSD to SSD.

After transferring data from SSD, RSP is transferred and LSD recognizes RSP and change LSD to output Driver transfer Data to SSD.

DIB Data form SSD to LSD by Transformer has Differential structure of 180 phase difference between DIBP and DIBN for Noise Robustness

1) Application Network:	PSTN (RJ-11)
2) Communication Mode:	Half-Duplex, ITU V.8, V.34, V.17, V.29, V.21, V.27ter, ECM - Modem will auto train down only.
3) Communication Standard:	ITU-T Group 3
4) Max. Modem Speed:	33.6 Kbps
5) Encoding:	MH, MR, MMR, JPEG, JBIG
6) Transfer Rate:	3 seconds (standard resolution, MMR, 33.6kbps, CCITT No.1, LTR) Under 2sec(JBIG) - Phase “C” by ITU-T No.1 Chart/Memory Transmission/ECM
7) Fax Modes:	- Standard (203 x 98 dpi) - Fine (203 x 196 dpi) - Super Fine (300 x 300 dpi)
8) Fax Contrast:	Adjustable 3 levels (Light/Normal/Dark)
9) Fax Memory:	4MB (About 300 Sheets of CCITT No.1 Chart at standard resolution). User selectable parameters will be stored in NVRAM.
10) TX/RX Journal :	Available.
11) Tel/ID List:	Available.
12) Confirmation Reports for Send:	- Upon successful transmission - Upon failure - Reduced image of first page (except OHD, and partial page for complexity of the images) - Customer On/Off selectable
13) Management Reports:	- System Data List - Image TCR for Memory TX
14) TTI/RTI:	- TTI (Transmit Terminal Identification) printed at top of Fax Image. - RTI (Receiver Terminal Identification) printed at bottom of Fax Image the Transmitting devices fax number is substituted for receiving devices fax number is this footer.
15) Line Control Unit (LIU):	- Input Sensitivity : Not programmable - Output Level : -9 to -15 dBm (programmable) - Cable Equalization : Not programmable - Input/Output Impedance : per PTT requirements (programmable) - DC Resistance : per PTT requirements (programmable) - Insulation Resistance : Minimum 5M ohm
16) Header Transmission (Always On):	- Local Machine date and time - Local Machine ID - Local Machine Name - Transmit page count (3 digits)

Line Interface Part

This is Connection Part between system and PSTN(Public Switched Telephone Network), and primary circuit is usually located. Main functions are Line Interface, Telephone Connection and Line Condition Monitoring.

2.2.1.3 Scanner Section

Scan Part

1) Pictorial signal input part: output signal of CCD passes through Bypass Cap change to ADC at DS90DR218A, and defined signal between DS90DR218A and CHORUS3 processes the Image signal. When AFE accept each pixel, CDS(Correlated Double Sampling) technique which samples arm-level twice is used on each pixel by using CIP4e signal.

2) Pictorial image processing part: read CCD Pixel data in terms of 600dpi Line and process Error Diffusion Algorithm on Text mode and Photo mode, and then store Data at Scan Buffer on PC Scan mode without algorithm.

On every mode Shading Correction and Gamma Correction are executed ahead, then processing is executed later.

* Scan Image Control Specification
① Minimum Scan Line Time: 0.75ms
② Scan Resolution : Max. 600DPI
③ Scan Width : 216mm
④ main function
- Internal 12bit ADC
- White Shading Correction
- Gamma Correction
- CCD Interface
- 256 Gray Scale

3) CCD Operating Part : CCD Image sensor use +5V and Inverter uses +24V
- CCD Maximum Operating Frequency : 10MHz
- CCD Line time : 0.75ms
- White Data output Voltage : 0.7V±0.5V (Mono Copy, 0.75ms/line)
- Maximum Inverter Current : 600 mA Max.(+24V)

1) Scanning Device:	Color CCD (Charge Coupled Device) Module
2) Supported Operating Systems:	Windows 2000/2003/ XP/Vista/2008, MAC (English only, no status monitor, web download only) Mac: PostScript Network Print only Linux: Red Hat 8.0~9.0, Fedora Core 1~3, Mandrake 9.0~10.2, SuSE 8.2~9.2
3) Compatibility:	TWAIN Standard
4) Maximum Scan Width:	216mm (8.5 inches)
5) Effective Scan Width:	208mm (8.2 inches)
6) Optical Resolution:	600x600 dpi
7) Interpolated Resolution	Maximum 4800 dpi
8) Preview Scan:	75 dpi

9) Scan Modes/Speeds: (USB 2.0, 300dpi, Letter Size, Pentium 4 2.xGHz, 128MB RAM)	DADF	- Linearity : 15 sec. (Letter, 300dpi, USB) - Gray Scale : 20 sec. (Letter, 300dpi, USB) - Color : 30 sec. (Letter, 300dpi, USB)
	Platen	- Linearity : 15 sec. (Letter, 300dpi, USB) - Gray Scale : 20 sec. (Letter, 300dpi, USB) - Color : 30 sec. (Letter, 300dpi, USB)
10) DADF Capacity:		50 sheets (20 lb)
11) Image Compression:		None
12) PC Interface: (USB & Parallel are not simultaneously supported)		- USB (without HUB mode) Requires 6 ft. USB Cable (not supplied by SEC)
13) Minimum PC Specification:		Pentium-II 233MHz, 64MB RAM, 120MB free disk space
14) Registration Position for Original:		- Platen : Rear-Left Corner (when facing front/operator panel). - DADF : Center
15) Number of Copies:		3 digits (199 maximum for LCD display and reports)

2.2.1.4 OPE Pannel Section

(1) Configuration

Operations Panel uses Main Control and separated OPE Chip Micom and work as inner program, systemic operation is serial system which exchange Date with UART Port of Main Control. OPE Panel is approximately composed of Micom part, Matrix part and LCD.

(2) Micom controller

Micom has ROM, RAM, I/O Port built-in and displays and lights LCD by CPU command of Main Control Part and report Key recognition Data to Main Control Board.

(3) Operator Panel Button Functions

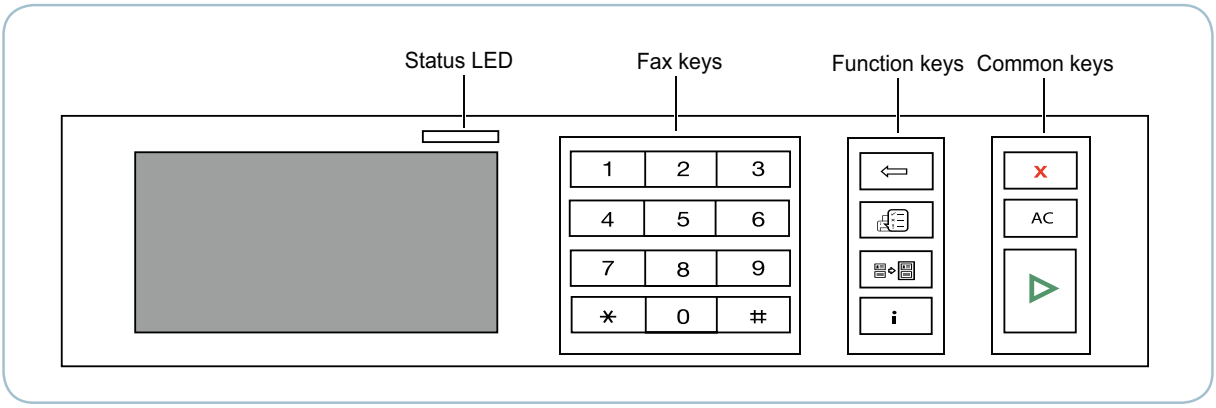

Common Keys

Press:	To:
X	Stop an operation at any time, or return to main menu.
AC	Reverts the current setting to the default values.
▷	Start a job.

Function Keys

Press:	To:
⇦	Deletes characters in the edit area.
	Shows the jobs currently running.
	You can copy both sides of an ID Card, such as a driver's license, to a single side of paper.
i	Gives detailed information about this machine's menus or status.

Fax Keys

Press:	To:
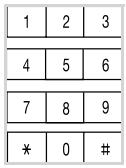	Dial/Enter number.

(4) Understanding the Status LED

When the problem occurs, the Status LED indicates the machine's condition by the light color of it's action.

Status		Description
Off		• The machine is off-line. • The machine is in power save mode. When data is received, or any button is pressed, it switches to on-line automatically.
Green	Blinking	The machine is warming up or ready to receive the data.
	On	The machine is on-line and can be used.
Red	Blinking	• A minor error has occurred and the machine is waiting for the error to be cleared. Check the display message. When the problem is cleared, the machine resumes. • The toner cartridge is low. Order a new toner cartridge. You can temporarily improve print quality by redistributing the toner. • The toner cartridge is totally empty. Remove the old toner cartridge and install a new one. • A paper jam has occurred. • There is no paper in the tray. Load paper in the tray. • The machine has stopped due to a major error. Check the display message.

2.2.1.5 Printer Section

Printer is consisted of the Engine parts and F/W, and engine parts is consisted of the mechanical parts comprising Frame, Feeding, Developing, Driving, Transferring, Fusing, Cabinet and H/W comprising the main control board, power board, operation panel, PC Interface.
The main controller is consisted of ASIC parts, Memory parts, Engine
Interface parts and it functions as Bus Control, I/O Handling, drivers & PC Interface by CPU.
The Engine Board and the Controller Board are in one united board, and it is consisted of CPU part and print part in functional aspect. The CPU is functioned as the bus control, I/O handling, drivers, and PC interface.
The main board sends the Current Image, Video data to the LSU and manages the conduct of Electro photography for printing. It is consisted of the circuits of the motor (paper feed, pass) driving, clutch driving, pre-transfer lamp driving, current driving, and fan driving.
The signals from the paper feed jam sensor and paper empty sensor are directly inputted to the main board.

1) Printing Method:	Laser-based Electro-photography
2) Supported Operating Systems:	Windows 2000/2003/XP/Vista/2008/ MAC (English only, no status monitor, web download only) Linux: Red Hat 8.0~9.0, Fedora Core 1~3, Mandrake 9.0~10.2, SuSE 8.2~9.2
3) Emulation:	PCL6, PS3,PCL5e
4) Maximum Paper Size:	Legal
5) Effective Printing Width:	- Letter/Legal : 208mm - A4 : 202mm
6) Resolution: (selectable from Print Driver)	- Addressable 1200 x1200 dpi - 600x600 dpi (True; no RET)
7) Speed:	35ppm (Letter)
8) Input Paper Capacity:	- Tray : 250 sheets (20 lb) - Bypass : 50 sheets (20 lb)
9) Output Paper Capacity:	150 sheets (20 lb; sequenced 1 to N, face down)
10) Feed Direction:	Front In, Front Out (FIFO)
11) PC Interface:	- USB 2.0(without HUB mode) Requires 6 ft. USB Cable (not supplied by SEC)
12) Toner Cartridge:	- Toner Low Sensor : None - Toner Low Indicator : Message displayed on LCD - Cartridge Missing Indicator : Message displayed on LCD
13) Paper Sensing:	- Tray : “Add Paper” message displayed on LCD - Bypass : “Add Paper” message displayed on LCD

2.2.1.6 Copier Section

1) Copy Mode:	Black and White
2) Scanner Type;	CCD with Flatbed/Platen and DADF
3) Maximum Size of Original: (max. width = 218 mm, max length = 400 mm)	- Platen : 216 x 297 mm - DADF : Legal (216 x 356 mm)
4) Optical Resolution:	600 x 600 dpi
5) Copy Quality - H x V: (User selectable via Content button)	- Text : 300x300 dpi(DADF), 600x600 dpi (Platen) - Text/Photo : 300x300 dpi(DADF), 600x600 dpi (Platen) - Photo : 300x300 dpi(DADF), 600x600 dpi (Platen)
6) Supported Media Types:	Plain, Label, Cardstock, Transparency
7) Copy Speed: (SDMP = Single Document, Multiple Printout, MDSP = Multiple Document, Single Printout)	- Platen, SDMP : 35cpm (Letter) - DADF, SDMP : 35cpm (Letter) - DADF, MDSP : 21cpm/Ltr, 20cpm/A4 (Simplex) 7ipm/Ltr, 6ipm/A4 (Duplex)
8) Reduce/Enlarge:	- Platen : 25% - 400% (1% increments) - DADF : 25% - 100% (1% increments)
9) Non-printable Area:	6 mm (Top, Bottom, and each Side)
10) Copy Count: (Page count displayed on LCD during copy operation)	1 to 199
11) Copy Modes:	Text, Text/Photo, Photo
12) Fixed R/E Setting:	100%, Auto-fit, 2(4)-Up
13) Darkness Control:	5 levels
14) First Copy Output Time (FCOT):	- Platen : 8.5 sec. (600 x 600 dpi) - DADF : 15 sec. (600 x 600 dpi)
15) Duplex Copy	1 → 1 Sided 1 → 2 Sided Long Edge 1 → 2 Sided Short Edge 2 → 1 Sided Long Edge 2 → 1 Sided Short Edge 2 → 2 Sided Long Edge

2.2.1.7 Telephone Section

1) Speed Dial:	400 Locations (46 digits maximum per location)
2) On-hook Dial (manual fax):	Yes
3) Last Number Redial:	Yes
4) Automatic Redial:	Yes
5) Pause:	Yes
6) Ringer Volume:	Off, Low, Medium, High
7) Tone/Pulse:	Selectable (Tech Mode Only no Telecom certification for Pulse mode)

2.2.1.8 SMPS & HVPS Section

The SMPS supplies DC Power to the System.
It takes 110V/220V and outputs the +5V, +24V to supply the power to the main board and DADF board.
The HVPS board creates the high voltage of THV/MHV/Supply/Dev and supplies it to the developer part for making best condition to display the image. The HVPS part takes the 24V and outputs the high voltage for THV/MHV/BIAS, and the outputted high voltage is supplied to the toner, OPC cartridge, and transfer roller.

■ HVPS (High Voltage Power Supply)

• Transfer High Voltage (THV+)
- Input Voltage: 24 V DC +15% / -10%
- Output Voltage: +1300V±3% at 200MΩ load

• Charge Voltage (MHV)
- Input Voltage : 24 V DC +15% / -10%
- Output Voltage : -1350V±3% at 50MΩ load

• Cleaning Voltage (THV-)
- Input voltage : 24VDC+15%/-10%
- Output voltage : -1200±20% at 200MΩ load

• Developing Voltage (DEV)
- Input Voltage : 24VDC+15%/-10%
- Output Voltage: -330±3% at 50MΩ load

• Supply
- Input voltage : 24VDC+15%/-10%
- Output voltage : -530±3% at 50MΩ load

■ SMPS (Switching Mode Power Supply)

It is the power source of entire system.
It is consisted of the SMPS part, which supplies the DC power for driving the system, and the AC heater control part, which supplies the power to fuser. SMPS has two output channels. Which are 5V and +24V.

• AC Input
- Input Rated Voltage: AC 110V ~ 127V / AC 220V ~ 240V
- Rated Frequency : 50/60 Hz

• Rated Output Power

NO	ITEM	CH1	CH2	Remark
1	CHANNEL NAME	+5V	+24.0V	
2	CONNECTOR PIN	CON 3 5V PIN: 11,13 GND PIN: 12,14,16	CON 3 24V PIN:3,5,7,9 GND PIN:4,6,8,10	
3	Rated Output	+5V ± 5% (4.75 ~ 5.25V)	+24V ± 10% (21.6 ~ 26.4V)	
4	Max. Output Current	3A	4.0A	
5	Peak Loading Current	3.6A	10.0A	1ms
6	RIPPLE NOISE Voltage	100mVp-p	Under 500mVp-p	
7	Maximum output	15W	96W	
8	Protection for loading shortage and overflowing current	Shut down or Fuse Protection	Shut down or Output Voltage Drop	

■ FUSER AC POWER CONTROL

Fuser(HEAT LAMP) gets heat from AC power. The AV power controls the switch with the Triac, a semiconductor switch. The 'ON/OFF control' is operated when the gate of the Triac is turned on/off by Phototriac (insulting part).
In other words, the AC control part is passive circuit, so it turns the heater on/off with taking signal from engine control part.

• Triac feature : 16A-LV model / 12A-HV model, 600V SWITCHING

• Phototriac Coupler (PC501)
- Turn On If Current : 15mA ~ 50mA(Design: 16mA)
- High Repetive Peak Off State Voltage : Min 600V

3. Disassembly and Reassembly

3.1 General Precautions on Disassembly

When you disassemble and reassemble components, you must use extreme caution. The close proximity of cables to moving parts makes proper routing a must.
If components are removed, any cables disturbed by the procedure must be restored as close as possible to their original positions. Before removing any component from the machine, note the cable routing that will be affected.

Whenever servicing the machine, you must perform as follows:

1. Check to verify that documents are not stored in memory.
2. Be sure to remove the toner cartridge before you disassemble parts.
3. Unplug the power cord.
4. Use a flat and clean surface.
5. Replace only with authorized components.
6. Do not force plastic-material components.
7. Make sure all components are in their proper position.

Releasing Plastic Latches

Many of the parts are held in place with plastic latches. The latches break easily; release them carefully.
To remove such parts, press the hook end of the latch away from the part to which it is latched.

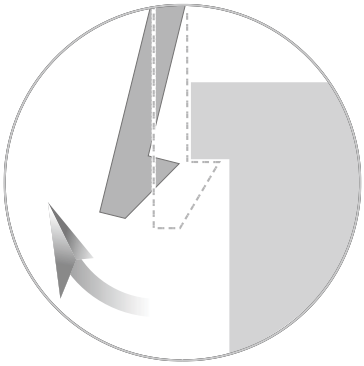

3.2 General Disassembly

3.2.1 Cover

1. 1. Take out the Cassette Unit from SET.

2. Open the front cover. And take out the Toner Cartridge.

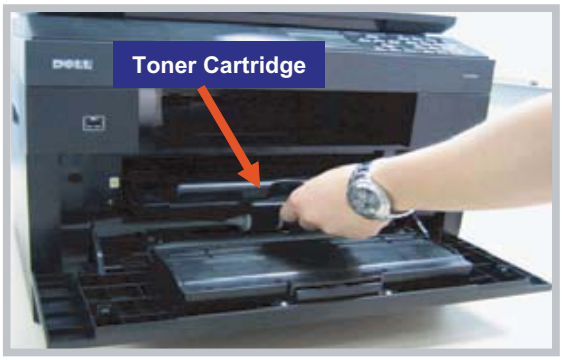

3. Separate the front cover from locking by pulling in the direction of arrow.

4. Remove the Duplex Guide from the rear side of SET.

5. To remove the Cover-Rear, first remove Cover-DIMM.

6. Remove the 4 screws as shown below.

7. Remove the Cover-Rear.

8. Remove the Cover-Side(Left,Right) by removing the 3 hook from the bottom.

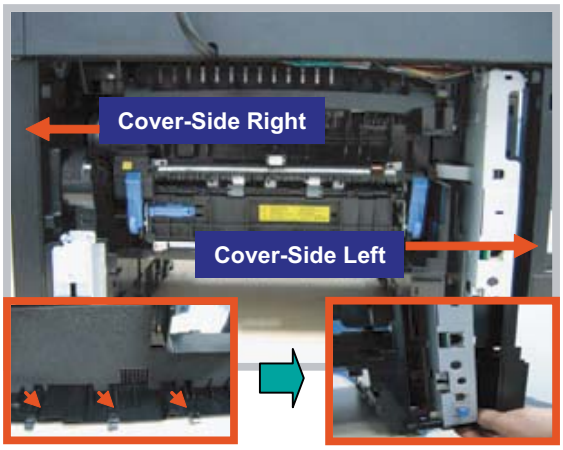

3.2.2 Fuser-Unit

1.Open the Cover-Rear. And remove the 4 screws.

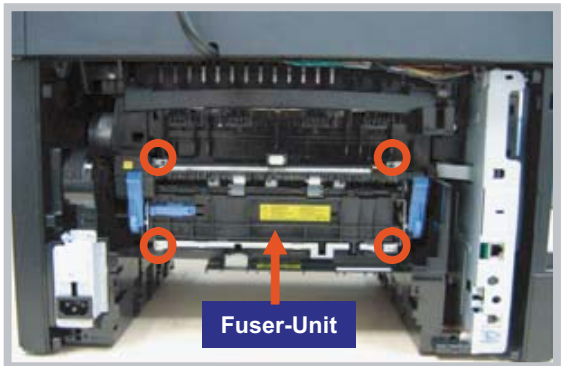

2. Take out the Fuser-Unit with holding the lever.

※ If you want to repair the sub unit of Fuser, please consult the Fuser exploded view.

3.2.3 Controller Board

1. To remove the Controller board, first remove the Cover-Side Left.

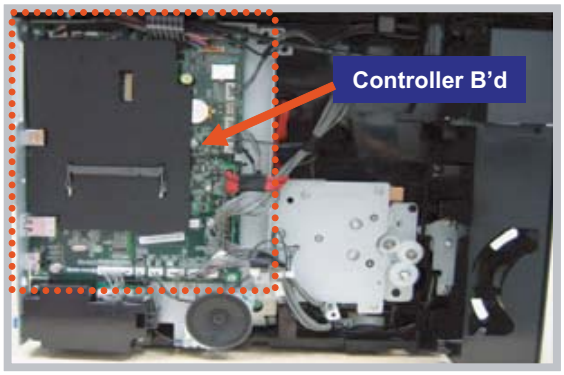

2. Unplug the all harness from the Controller board.

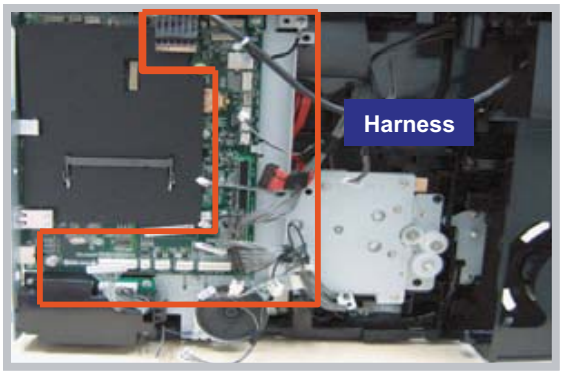

3. Remove the all screws securing the Main shield. Separate the Main shield.

3.2.4 Scanner ASS'Y and DADF Unit

1. Before disassembling Scan Assy, Remove the Cover-Rear, Cover-Side(L/R), and Main Shield.

※ Scan ASS'Y consists of the DADF-Unit and OPE-Unit

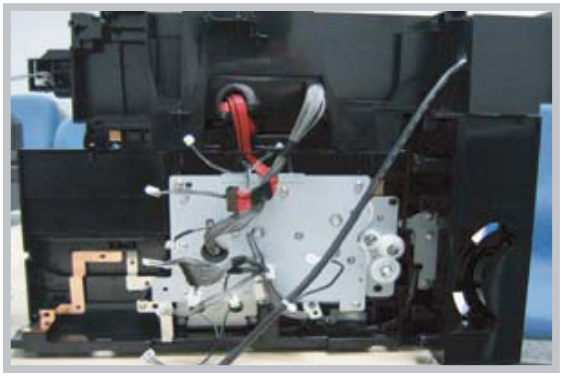

2. Remove the 2 screws from the rear side of SET.

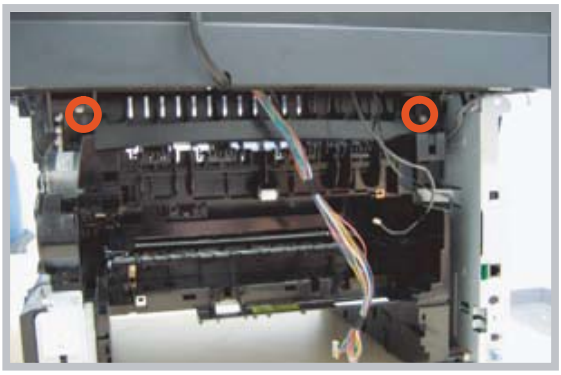

3. Pull the Scan Assy in the direction of arrow and Lift up it.

※ If you want to repair the sub unit of DADF-Unit, consult the Exploded view.

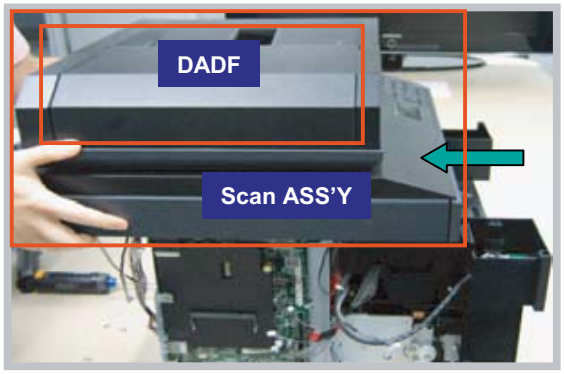

4. Open the Cover-DADF and remove the DADF roller.

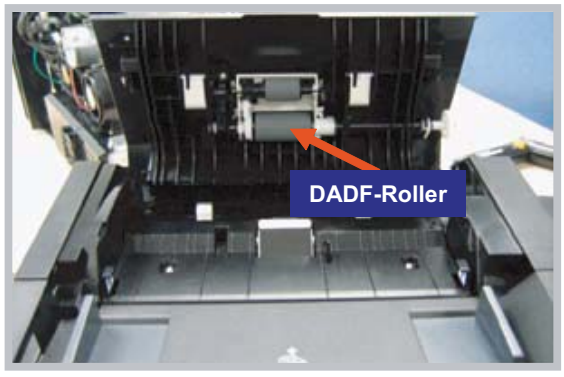

3.2.5 OPE-Unit

1. Remove the Cover-OPE Front from the Scanner Assy.

2. Remove the 3 screws.

3. Turn the OPE-Unit up with attention to hook. Unplug the connector and release the OPE-Unit.

Caution : Do not overpower to remove the hook. It is easy to break the hinge.

3.2.6 Cover-Middle and Cover-Exit

- Before disassembling the Cover-Middle and Cover-Exit, Remove the Scan Assy, Cover-Rear, Cover-Side(L/R), and Main Shield.

1. Remove the 2 screws securing Cover-Exit.

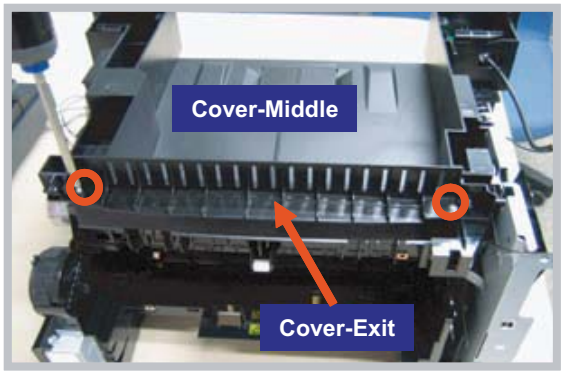

2. Separate the Cover-Exit.

3. Remove the 1 Screw from right side.

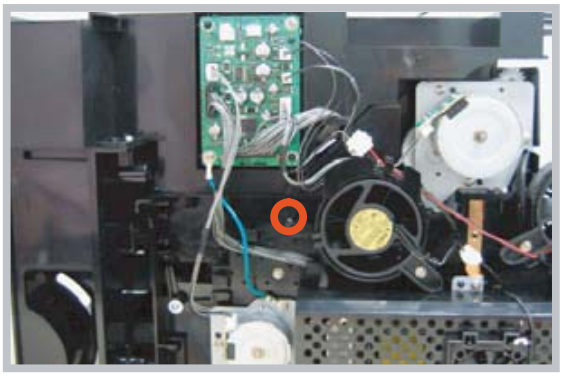

4. Remove the 7 screws on the Cover-Middle. And release the Cover-middle.

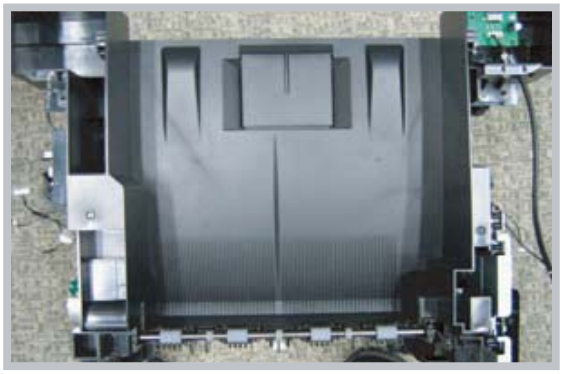

3.2.7 LSU-Unit

- Before disassembling the LSU unit, Remove the Scan Assy, Cover-Rear, Cover-Side(L/R), Cover-Exit, Cover-Middle.

1. Remove the LSU unit after the 2 harness and 4 screws.

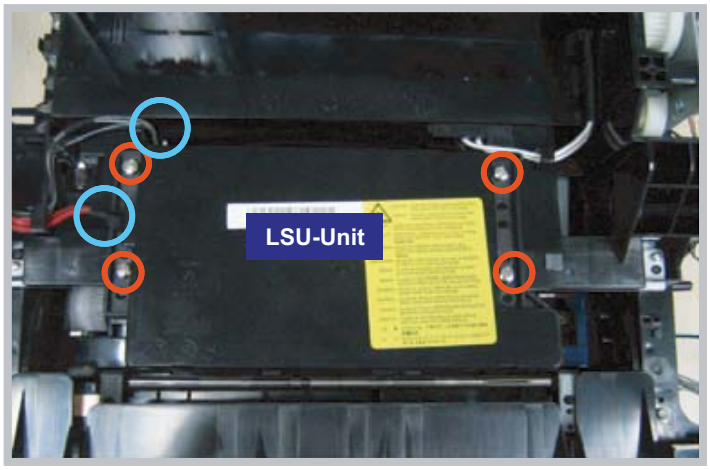

3.2.8 Drive-Unit

- Before disassembling the Drive unit, Remove the Cover-Side(L/R), Main shield.

1. Remove the Drive unit after remove the 5 screws.

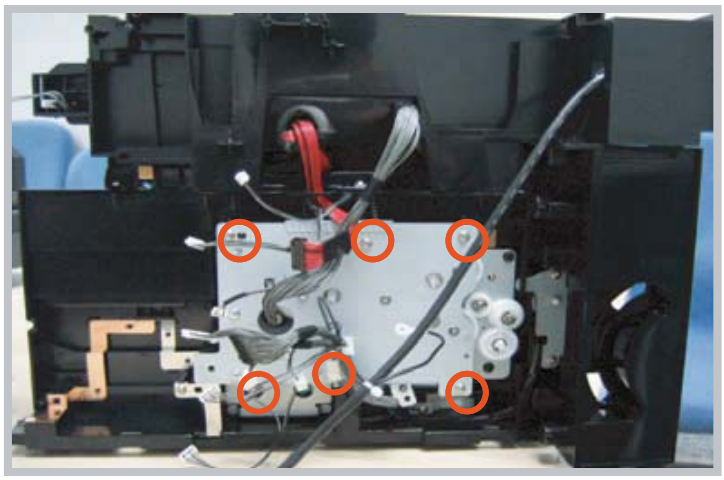

3.2.9 Pick_Up Roller

- Before disassembling the Pick up roller, You must remove the Toner cartridge and Cassette Unit.

1. First turn upside down the SET.

2. Remove the Pick up roller rubber by pulling a hook.

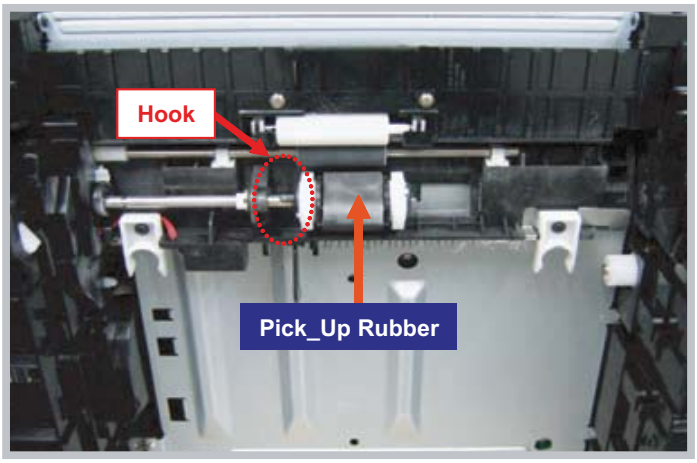

3.2.10 SMPS

- Before disassembling the SMPS board, remove the Cover-Rear, Cover-Side(Right), Duplex Motor.

1. Remove the Cover-SMPS after remove the 2 screws.

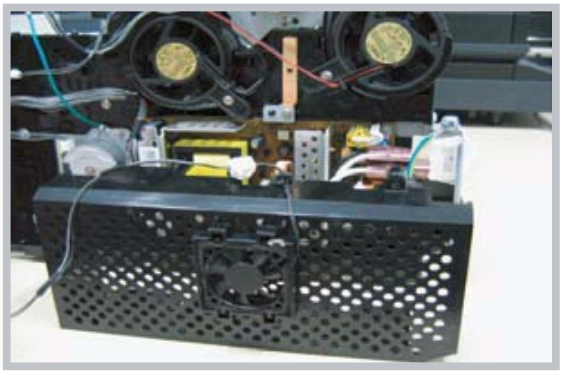

2. Remove the SMPS Shield after remove the 2 screws.

3.2.11 HVPS

- Before disassembling the HVPS board, You must remove the Toner cartridge, Cassette Unit, Pick-Up roller Assy, Duplex Motor. And turn upside down the SET.

1. Separate the HVPS Shield after remove the 8 screws.

Caution : When disassembling and assembling the HVPS Shield, be careful the harness of the Cassette Sensor.

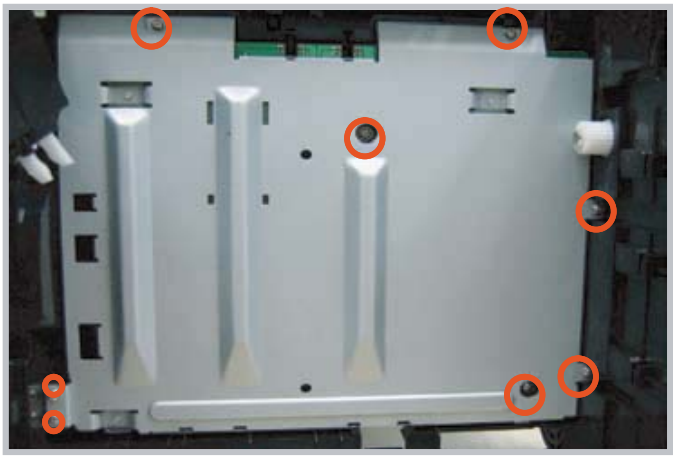

3.2.12 Transfer Roller

- Before disassembling the Transfer roller, remove the toner cartridge.

1. Remove the Transfer roller.

Caution : Do not touch the surface of the Transfer Roller.

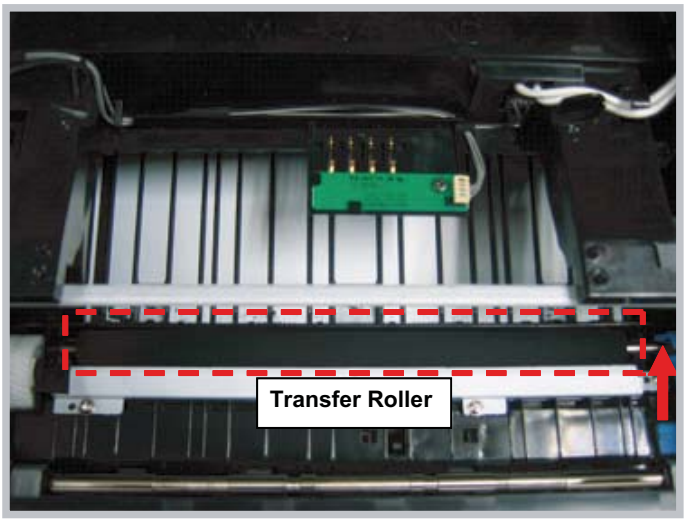

4. Alignment and Troubleshooting

4.1 Alignment and Adjustments

This chapter describes the main functions for service, such as the product maintenance method, the test output related to maintenance and repair, DCU using method, Jam removing method, and so on. It includes the contents of manual.

4.1.1 Paper path

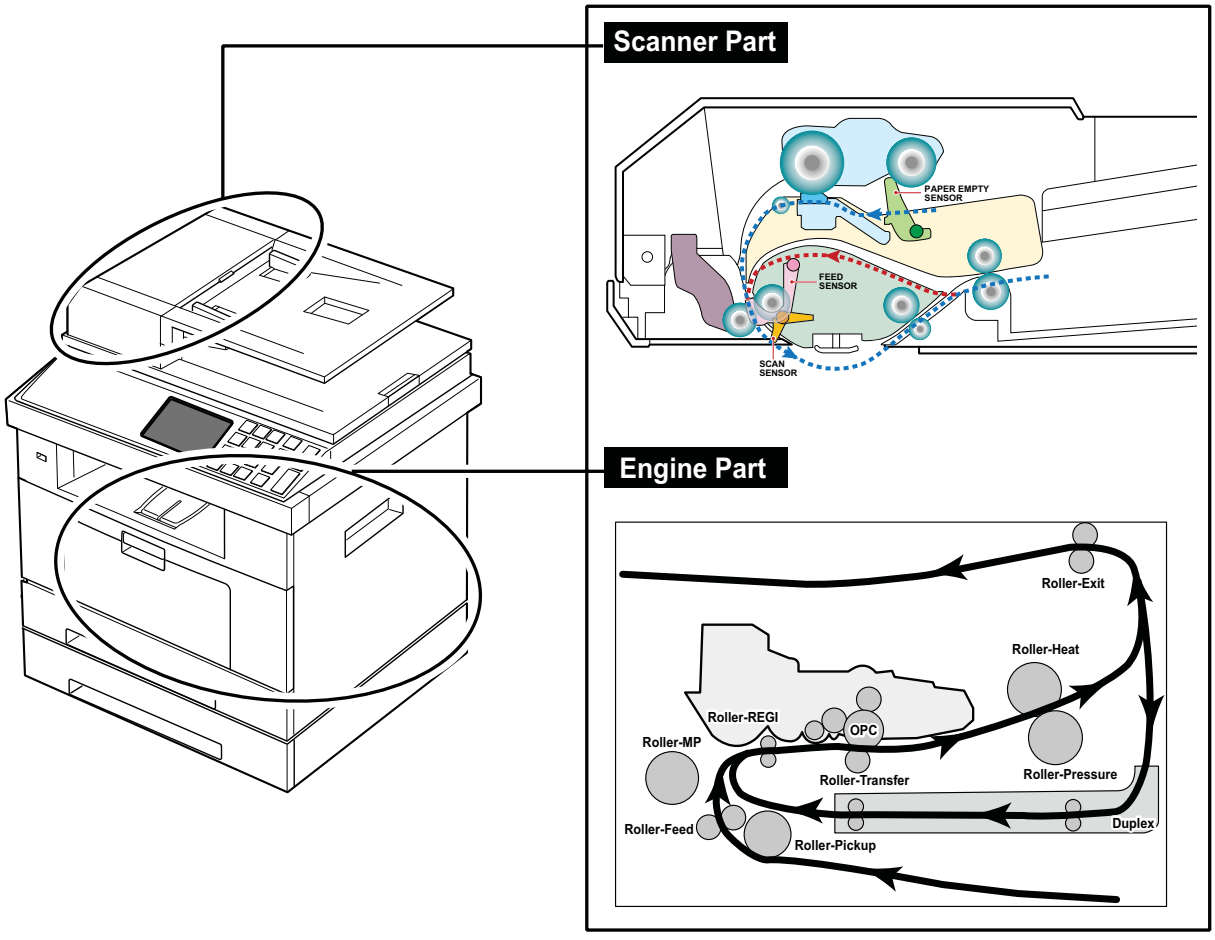

4.1.2 Clearing Paper Jams

Occasionally, paper can be jammed during a print job. Some of the causes include:
• The tray is loaded improperly or overfilled.
• The tray has been pulled out during a print job.
• The front cover has been opened during a print job.
• Paper was used that does not meet paper specifications.
• Paper that is outside of the supported size range was used.

If a paper jam occurs, LCD window will show it's speeds. Find and remove the jammed paper. If you don't see the paper, open the covers.
Do not use a pinset or a sharp metal tool when removing a jam.
The covering of a metal part can be removed which can cause an electric leakage.

■ Description of ENGINE JAM type (Layout)

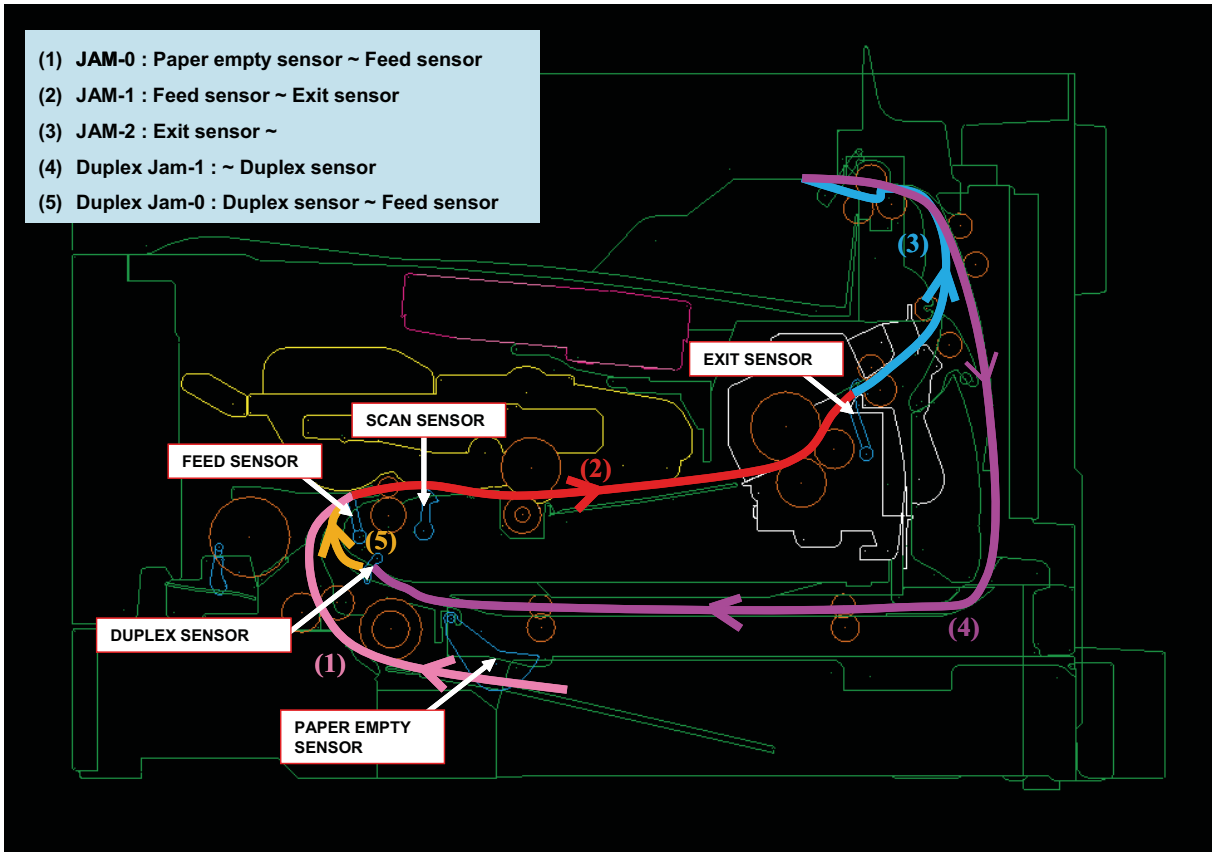

■ Description of ENGINE JAM type (Simplex)

Type	Case	Jam Removal	Jam Layout
Jam 0	Leading edge of media does not arrive at registration within a certain time after pick-up(If fails at a time,it tries pick-up again)	1. Pull out cassette 2. Remove jammed paper	
Jam 1	Leading edge of media does not arrive at Exit Sensor within a certain time after registration	1. Open front cover 2. Pull out toner cartridge 3. Remove jammed paper	
Jam 2	Trailing edge of media does not leave Exit Sensor within a certain time after touching registration	1. Open rear cover 2. Pull down jam lever on fuser unit and open fuser cover) 3. Remove jammed paper from exit	

■ Description of ENGINE JAM type (Duplex)

Type	Case	Jam Removal	Jam Layout
Duplex Jam 1	Trailing edge of media leaves Exit Sensor, and does not arrive at Duplex Sensor	1. Open rear cover 2. Remove jammed paper OR 1. Pull out duplex unit 2. Remove jammed paper from duplex unit	
Duplex Jam 0	Leading edge of media does not arrive at registration within a certain time after touching Duplex Sensor	1. Open rear cover 2. Remove jammed paper OR 1. Pull out duplex unit 2. Remove jammed paper from duplex unit	

■ Description of DADF JAM type

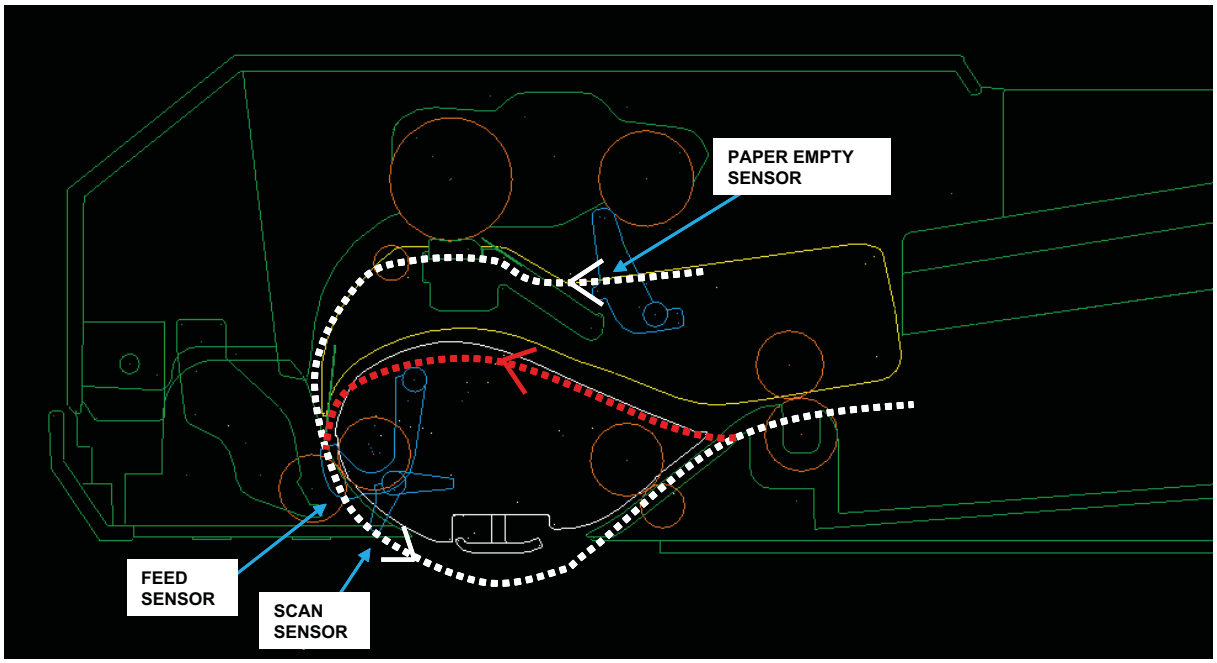

Type	Case	Jam Removal
Document Jam	All case of DADF Jam	1. Open DADF open cover 2. Remove jammed paper OR 1. Open DADF open cover and Lift up DADF middle cover 2. Remove jammed paper

4.1.2.1 Clearing Jams in the DADF

When a document jams while it passes through the DADF, a warning message appears on the display.
NOTE: To prevent document jams, use the document glass for thick, thin or mixed documents.

1. Remove the remaining documents from the DADF.

If the document is jammed in the paper feed area:

a. Open the DADF cover.

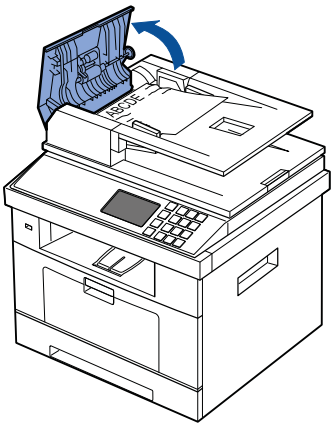

b. Remove the document by gently pulling it out.

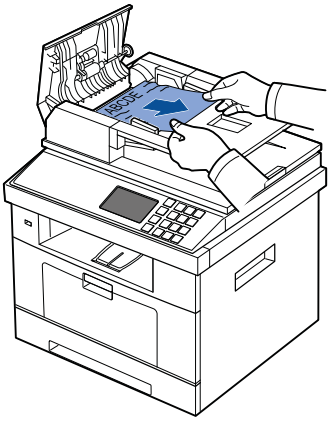

c. Close the DADF cover. Then reload the document into the DADF.

If the document is jammed in the paper exit area:

a. Open the DADF cover.

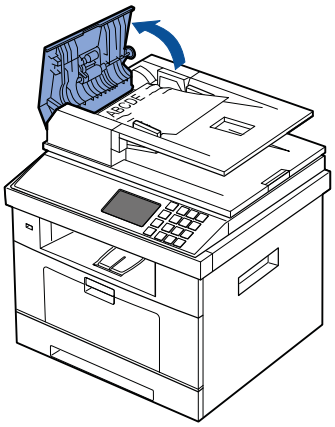

b. Open the document input tray upwards and pull the document gently out of the DADF.

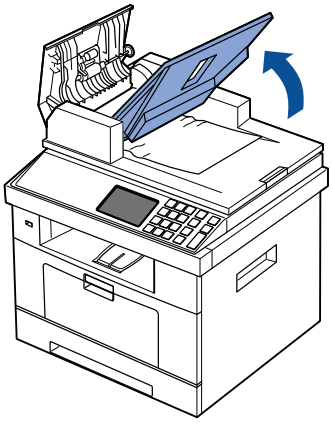

c. Remove the document by gently pulling it out.

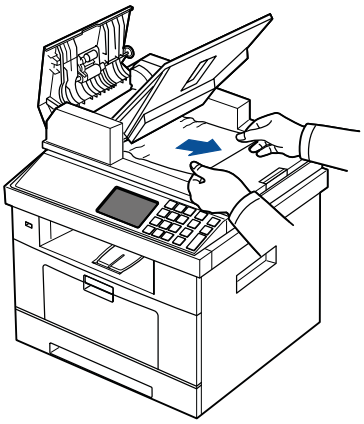

d. Close the DADF cover and the document input tray. Then load the documents back into the DADF.

If the document is jammed in the duplex path:

a. Open the DADF cover.

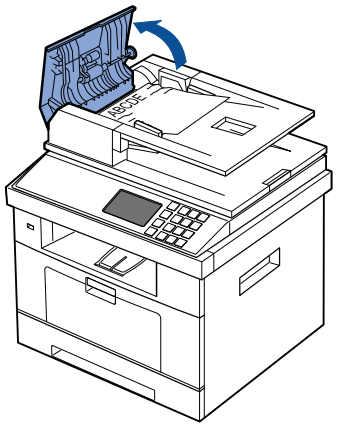

b. Open the DADF inner cover.

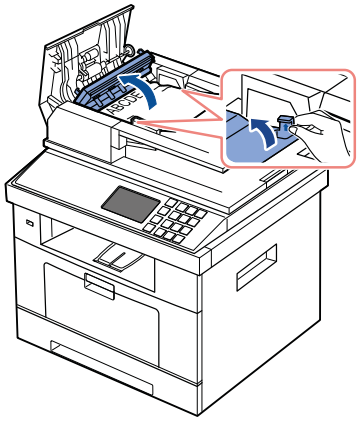

c. Remove the document by gently pulling it out.

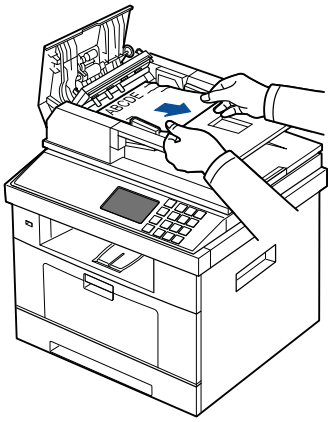

d. Close the DADF inner cover and the DADF cover. Then load the documents back into the DADF.

2. If you cannot see the paper or cannot pull the jammed paper out, open the document cover.

3. Remove the document from the feed area by carefully pulling it gently to the right.

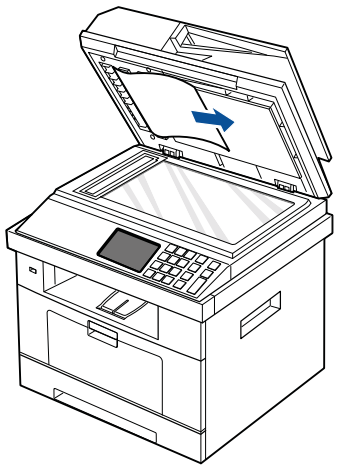

4. Close the document cover. Then load the documents back into the DADF.

4.1.2.2 Clearing Jams in the Paper Tray

When a paper jam occurs, Paper Jam appears on the display. Refer to the table below to locate and clear the paper jam.

Operator Panel Message	Location of Jam	Go to
Paper Jam 0	Paper Feed Jam (tray 1)	“Paper Feed Jam (tray 1)” or
Open Tray 1	Paper Feed Jam (optional tray 2)	“Paper Feed Jam (optional tray 2)”.
Paper Jam 1	Fuser Area Jam	“Fuser Area Jam”.
Remove Cartridge		
Paper Jam 2	Paper Exit Jam	“Paper Exit Jam”.
Open Rear Door		
Duplex jam 0	between the duplex unit and fuser area	“Duplex Jam 0”.
Remove paper & Open/Close Front Door		
Duplex jam 1	in the duplex unit	“Duplex Jam 1”.
Open Rear Door		

To avoid tearing the paper, pull the jammed paper out gently and slowly. Follow the steps below to clear the jam.

Paper Feed Jam (tray 1)

1. Open and close the front cover. The jammed paper automatically exits the printer.

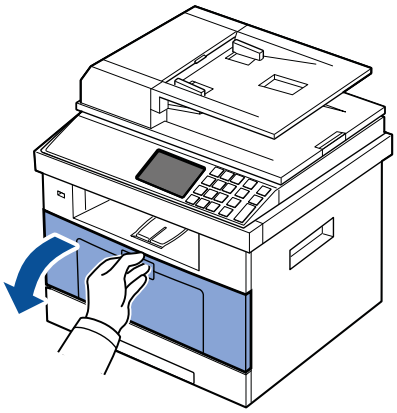

If the paper does not exit, go to the next step.

2. Pull the paper tray open.

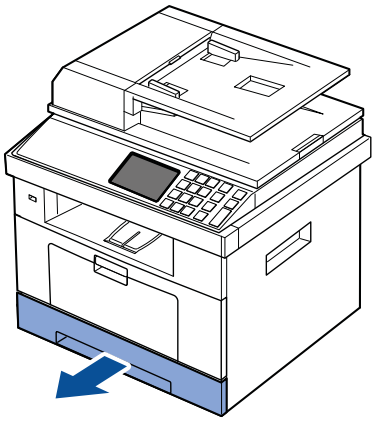

3. Remove the paper by gently pulling it straight out.

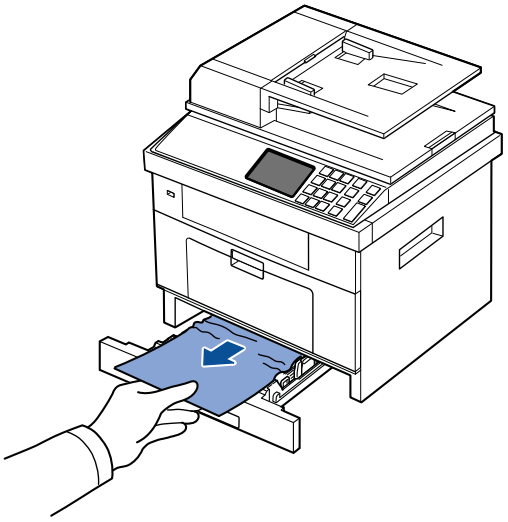

If you cannot see the paper or the paper does not move when pulled, check the fuser area. For more information, see "Fuser Area Jam".

4. Insert the paper tray into the printer until it snaps into place.
   Printing automatically resumes.

Paper Feed Jam (optional tray 2)

1. Pull the optional tray 2 open.

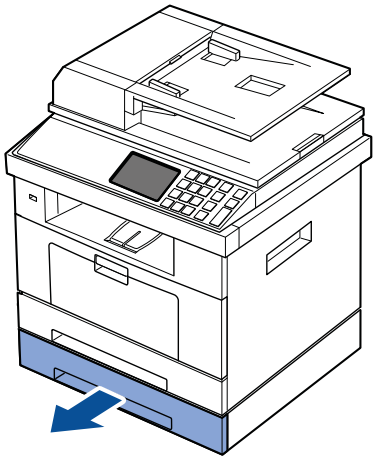

2. Remove the jammed paper from the printer.
   If you cannot see the paper in this area or the paper does not move when pulled, go to the next step.

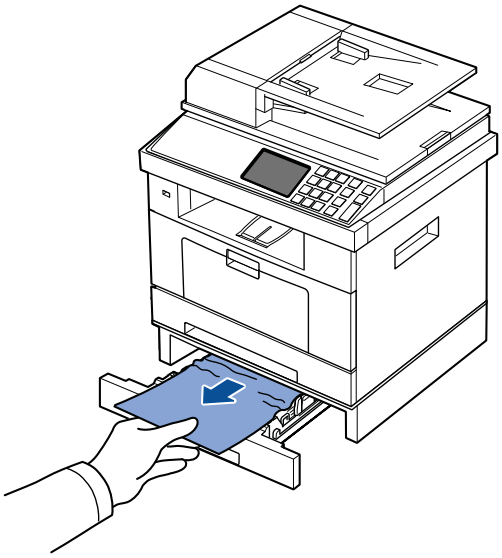

3. Pull the tray 1 half way out.

4. Pull the paper straight up and out.

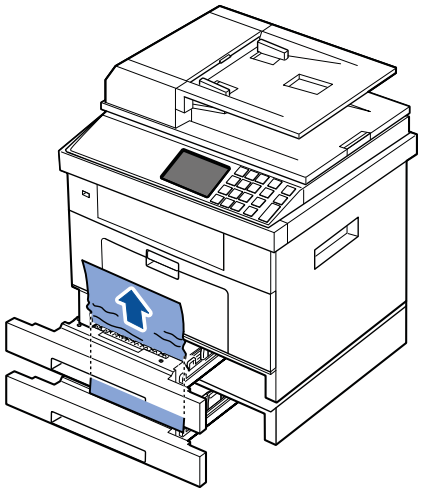

5. Insert the trays back into the printer.
   Printing automatically resumes.

4.1.2.3 MPF Jam

1. If the paper is not feeding properly, pull the paper out of the printer.

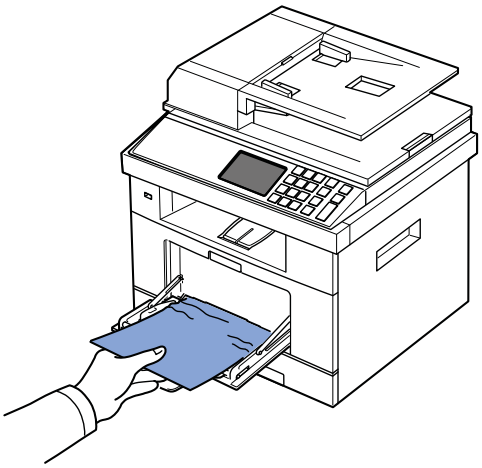

2. Open and close the front cover to resume printing.

4.1.2.4 Fuser Area Jam

NOTICE: The fuser area is hot. Take care when removing paper from the printer.

1. Open the front cover and lightly pull the toner cartridge straight out.

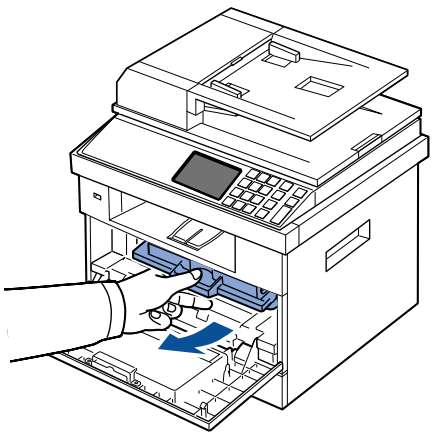

2. Remove the paper by gently pulling it straight out.

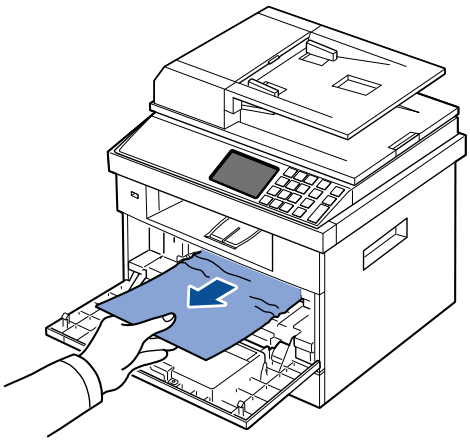

3. Replace the toner cartridge and close the front cover.
   Printing automatically resumes.

4.1.2.5 Paper Exit Jam

1. Open and close the front cover. The jammed paper automatically exits the printer.

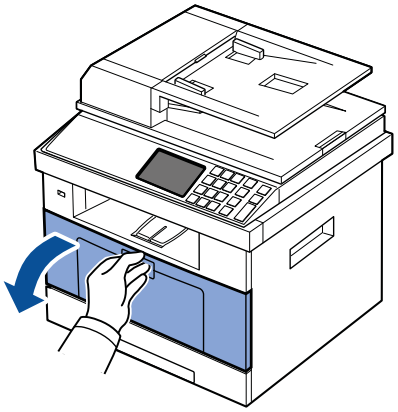

If the paper does not exit, go to the next step.

2. Gently pull the paper out of the output tray.

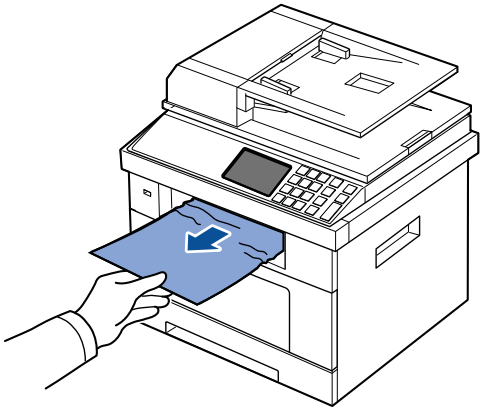

3. If you cannot see the paper in the output tray or the paper does not move when pulled, open the rear door.

4. If you see the jammed paper, push the two blue pressure levers down and remove the paper. Skip to step 9.

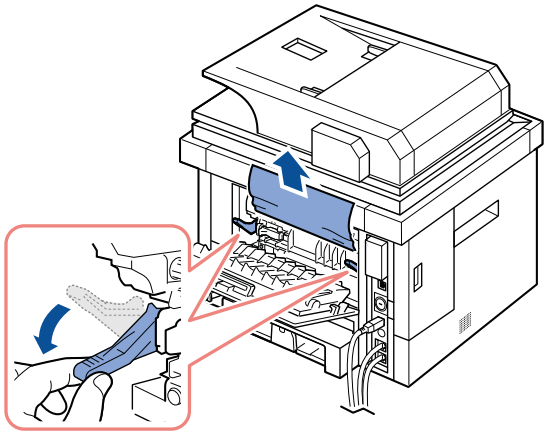

If you do not see the paper, go to the next step.

5. Fully open the rear door, as shown.

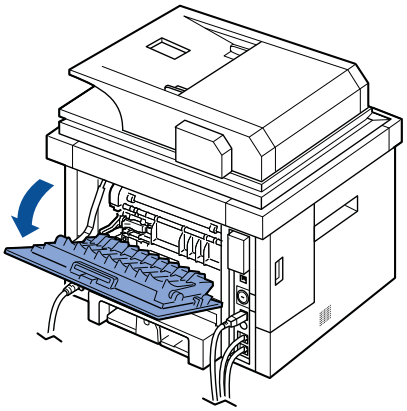

6. Unfold the duplex guide fully.

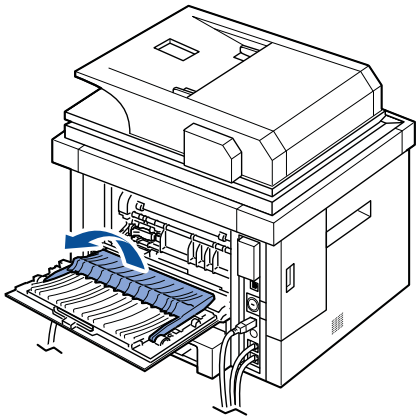

7. While pushing the fuser lever to the right, open the fuser door.
   NOTICE: Ensure that to unfold the duplex guide before opening the fuser door or you may damage the fuser door.

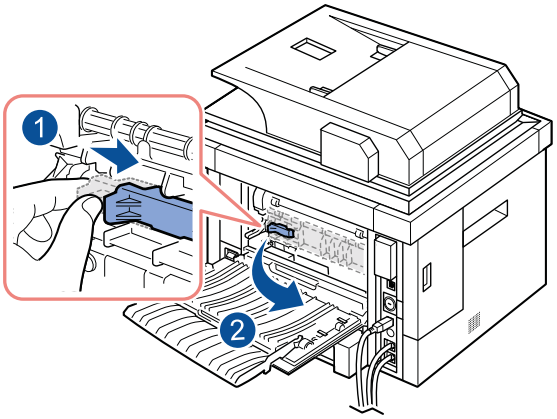

8. Pull the jammed paper out.
   If the jammed paper does not move when you pull, push the two blue pressure levers up to loosen the paper, and then remove it.

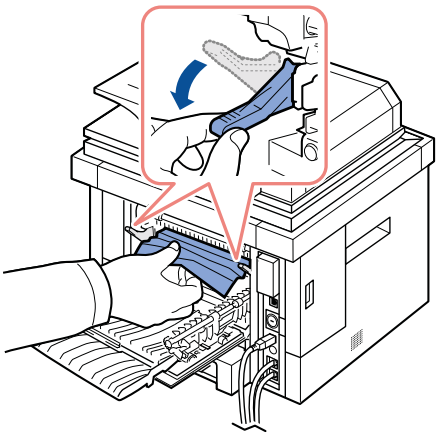

9. Return the levers, fuser door, and duplex guide to their original position.

10. Close the rear door.

11. Open and close the front cover.
    Printing automatically resumes.

4.1.2.6 Duplex Jam

Duplex Jam 0

1. Pull the duplex unit out of the printer.

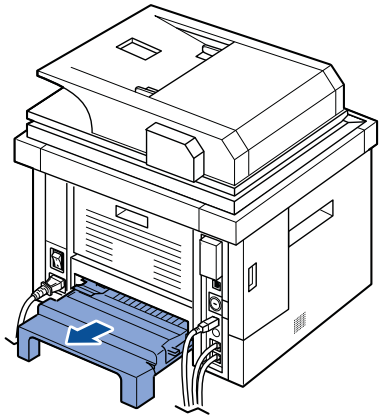

2. Remove the jammed paper from the duplex unit.

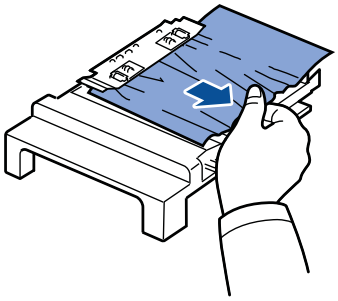

If the paper does not come out with the duplex unit, remove the paper from the bottom of the printer.

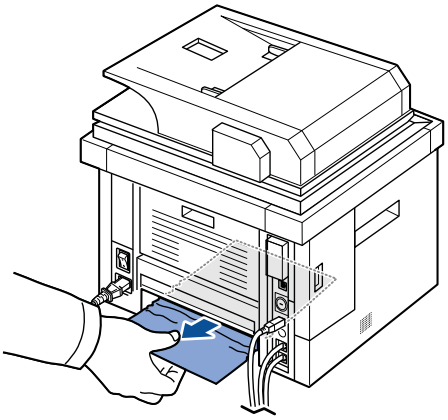

3. Push the duplex unit to the printer.

4. Open and close the front cover.
   Printing automatically resumes.

CAUTION: If you do not push the duplex unit correctly, paper jam may occur.

Duplex Jam 1

1. Open the rear door.

2. Unfold the duplex guide fully.

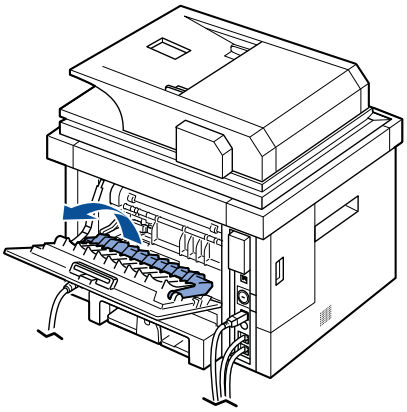

3. Pull the jammed paper out.

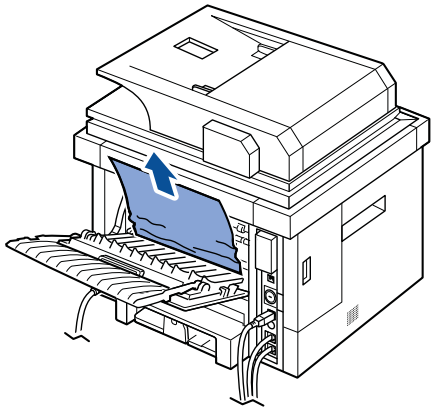

4. Return the duplex guide and close the rear door.

5. Open and close the front cover.
   Printing automatically resumes.

Tips for Avoiding Paper Jams

By selecting the correct paper types, most paper jams can be avoided. When a paper jam occurs, follow the steps outlined in “Clearing Jams in the Paper Tray”.

- Follow the procedures in “Loading Print Media in the Paper Tray”. Ensure that the adjustable guides are correctly positioned.
- Do not overload the paper tray. Ensure that the paper is below the paper capacity mark on the inside wall of the paper tray.
- Do not remove the paper from the tray while your printer is printing.
- Flex, fan and straighten the paper before loading.
- Do not use creased, damp or curled paper.
- Do not mix paper types in the paper tray.
- Use only recommended print materials. See “Paper Specifications”.
- Ensure that the recommended print side of print materials is facing down in the paper tray and facing up in the MPF.
- Ensure that the duplex unit is installed correctly.

- Cleaning the DADF Pick-up Roller/ Feed Roller

DADF Pick-up Roller

Feed-Roller

4.1.3 Diagnostic Mode

4.1.3.1 Entering/ Exiting Diagnostic Mode

To enter the diagnostic mode, press 1,2,3 number keys simultaneously.
When the password dialog box appears, enter “1934” and press the “OK” button.

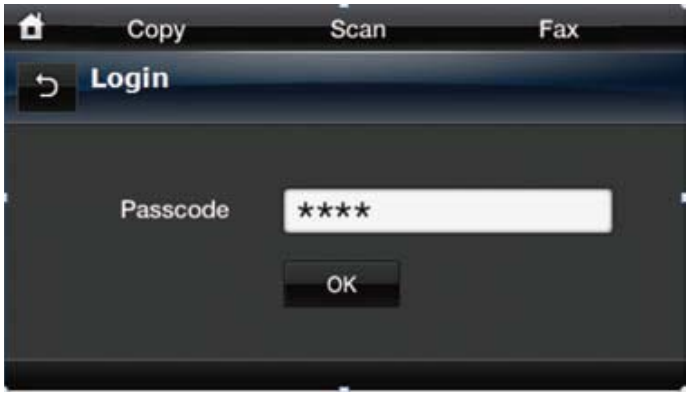

To exit the diagnostic mode, press the home button at the left upper corner of the display.
When exit the diagnostic mode, a popup window shall display.
Selecting “Yes” in “Reboot Copier “will reboot the set.

4.1.3.2 Diagnostic Mode Menu Tree

When entering the diagnostic mode, you can see the main window of diagnostic as shown below.

There are 2 contents. They are “Information” and “Test Routines”.
Each item will have several sub items and they will be listed in below table.

Depth1	Depth2	Depth3
Information	General	Service Tag
		Network IP Address
	Software Version	Set Version
		Main Controller
		User Interface
		Network Controller
	Report	Protocol
		Configuration
		Error Information
		Supplies Information
Test Routine	Copier	NVM Read/Write
		Test Routine
	Fax	NVM Read/ Write
		Test Routine
		Protocol Report
	Other	Print Test Pattern
		Shading Test
		Memory Clear

4.1.3.3 Information

Information menu will have below items

- General
- Software Version
- Report

a) General

When selecting General, OP displays Service Tag and Network IP Address.

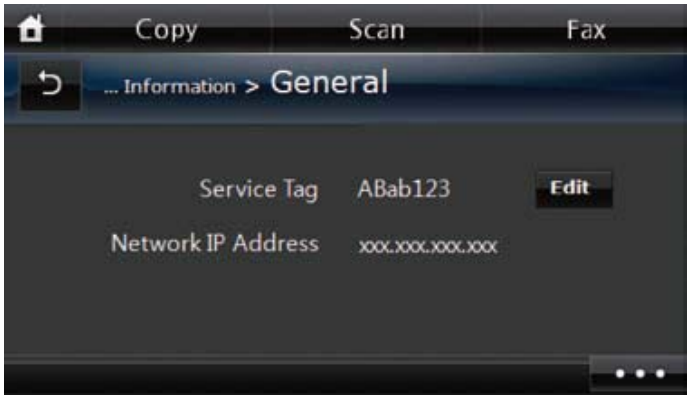

- Service Tag

Service Tag will be string and maximum length will be 7 characters.
Right side of Service Tag, there will be “Edit” button and service engineer can change it.

If user touch “Edit” button then keyboard will be displayed.
On the keyboard user can change the Service Tag.
Maximum length of Service tag will be 7 characters.
Only ‘A~Z’, ‘a~z’ and ‘0~9’ will be allowed on the keyboard

b) Software Version

This menu displays all the version of the software installed in the system in detail. The following software version will be shown in the menu.

- Set Version
- Main Controller
- User Interface
- Network Controller

C) Report

This menu displays reports which that can be printed from the system. The following reports will be available to print.

- Set Version
- Main Controller
- User Interface
- Network Controller

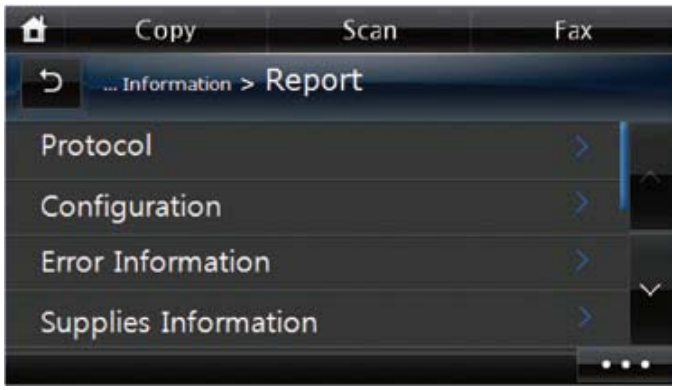

4.1.3.4 Test Routine

Test Routine has items to check machine functionalities.
This menu has below sub-items.

- Copier
- Fax
- Other

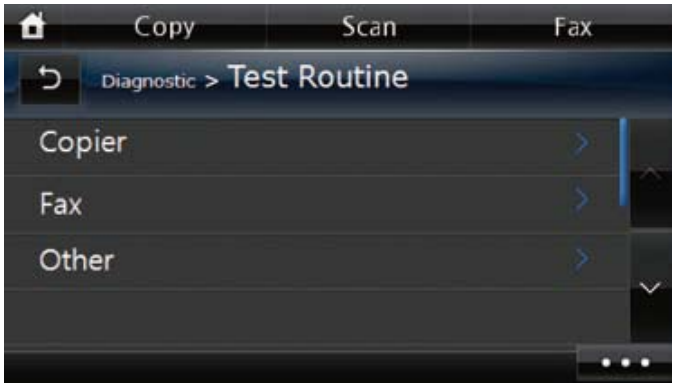

a) Copier

This menu has below sub-items.

- NVM Read/Write
- Test Routine

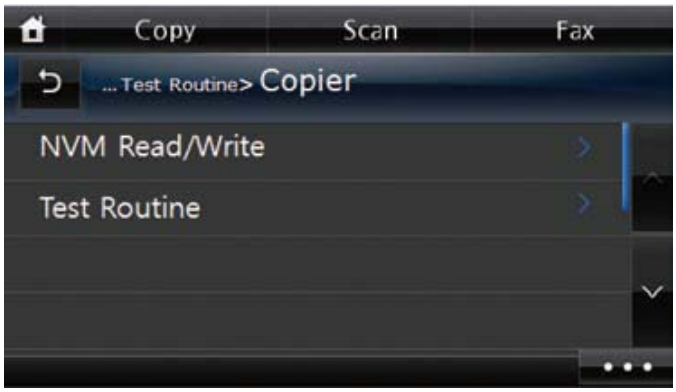

- NVM Read/Write

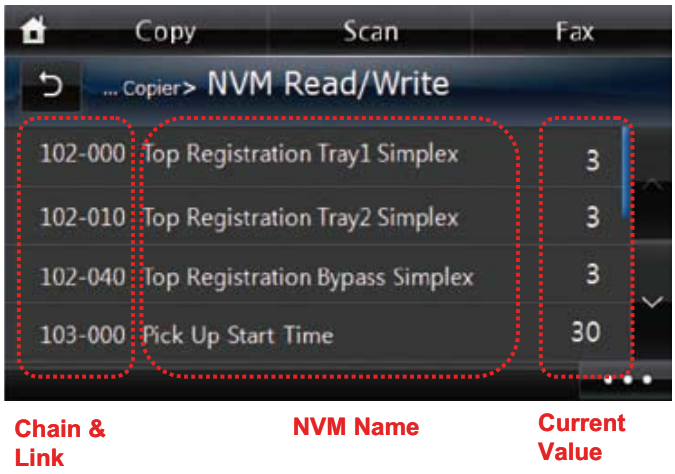

Each item of Copier NVM list consists of “Chain & Link”, “NVM Name” and Current Value.
If user touches one item then

1. Selected item is not editable then notification message will be display on LCD for 2 seconds

   “Selected item is not editable.”

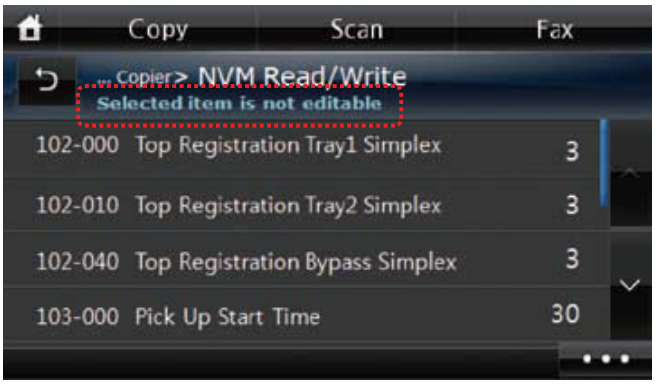

2. Selected item is editable then it will move to NVM Edit window.

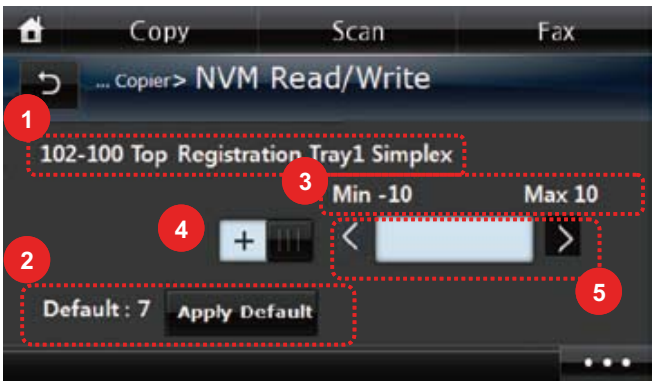

1 Name of item : it shall include chain & link

2 Default Value : It will display the default value of current item. If user touches “Apply Default” button then default value will be applied to current value on editing box.

3 Range : this area will display the range of selected item with minimum and maximum value.

4 Plus/Minus sign : If input value of selected item supports both positive and negative number then this member will be activated and user can select positive and negative.
Below icon will be displayed according to input range

Only positive number allowed :

Only negative number allowed :

Both Positive and Negative number allowed :

User can change positive to negative and negative to positive by touching this button

5 Editing box: User can increase and decrease the value by touching

User can input the value by numeric hard buttons (3*4 keys) also.

If user touches button then window will move to upper level and new value will be applied to the system. But new value is out of range, it will not move to upper level but display error pop-up window as below. When user closes pop-up, it will retain previous value.

- Engine/DADF Test Routines

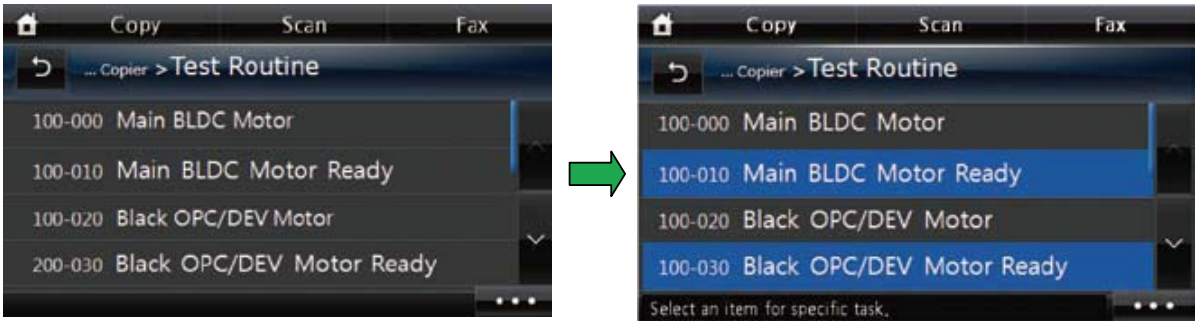

Test routine window consists of list of test items.
Each item has Chain/Link and item name.
User can select multiple items by touching on the list.
Maximum number of selection will be 3.
If user try to select more than 3 items, below error message will be displayed on LCD for 2 seconds.
"Exceeded maximum number of selections"
But some items are exclusive and can't select at the same time.
If user touches some items but it is conflict with already selected item then it will not selected.

If user touches • • • button then drop down menu will be displayed as below.

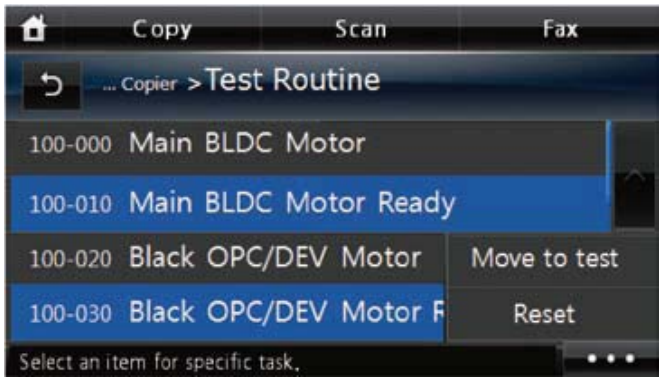

If user touches "Reset" then all the selected items will be de-selected.
If user touches "Move to test" button, then it will move to the window for executing test.
"Move to test" button shall be disabled if no item is selected.

On the test execution window, if user touches some item then test for touched item will start and background color will be changed to blue.
If user touch item which is on progress, then test will be stopped and background color will be revert back to gray.

During some items are on testing, if user touches button then drop down menu will be displayed as below.
Drop down menu will have “Stop All” button.
If no items are on testing, then this button will be gray out.
If user touch “Stop All” button then all items will stop testing.

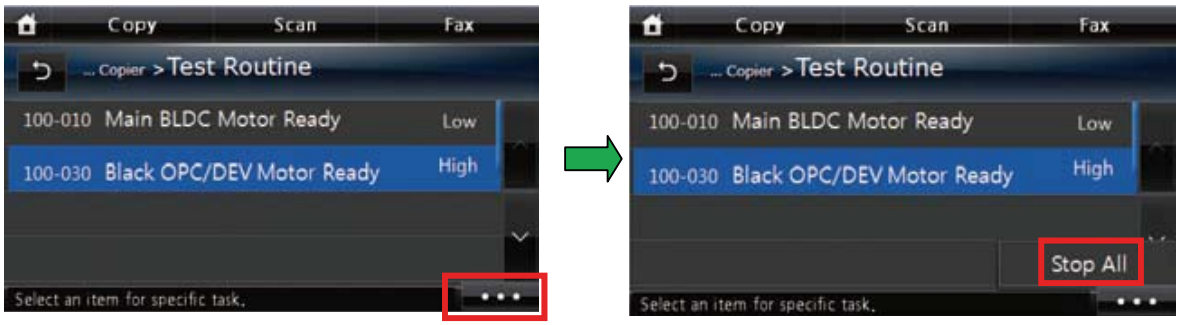

and button will work only when all the test items are stopped.

b) Fax

This menu has below sub-items.

- NVM Read/Write
- Test Routine
- Protocol Report

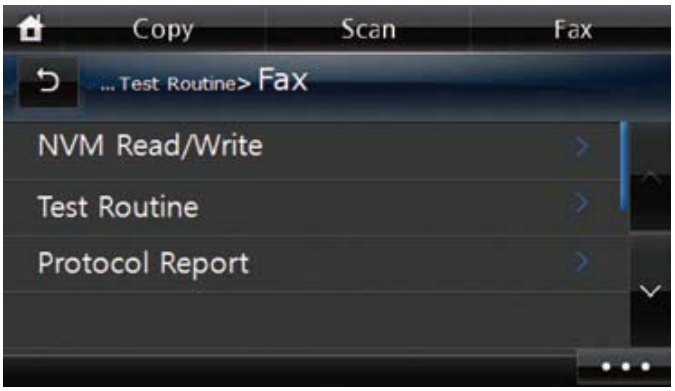

- NVM Read/Write

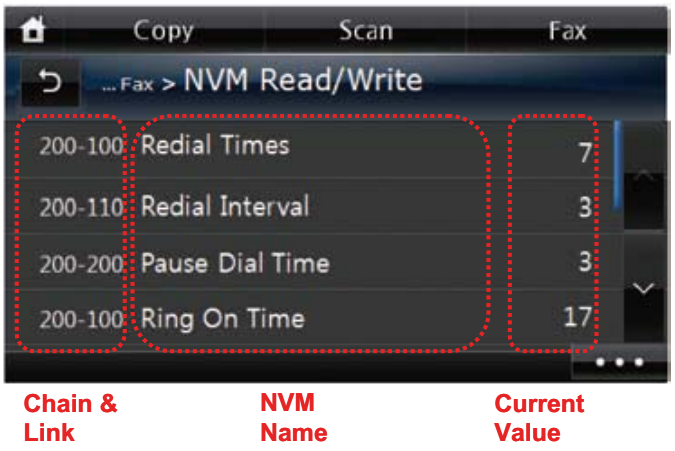

Each item of fax NVM list is consist of “Chain & Link”, “NVM Name” and Current Value.
If user touch one item then it will move to edit window as below

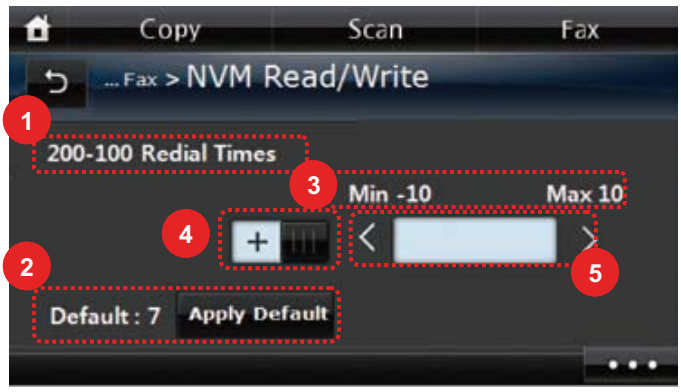

1 Name of item : it shall include chain & link

2 Default Value : It will display the default value of current item. If user touches “Apply Default” button then default value will be applied to current value on editing box.

3 Range : this area will display the range of selected item with minimum and maximum value.

4 Plus/Minus sign : If input value of selected item supports both positive and negative number then this member will be activated and user can select positive and negative.
Below icon will be displayed according to input range

Only positive number allowed :

Only negative number allowed :

Both Positive and Negative number allowed :

User can change positive to negative and negative to positive by touching this button

5 Editing box: User can increase and decrease the value by touching

User can input the value by numeric hard buttons (3*4 keys) also.

If user touches button then window will move to upper level and new value will be applied to the system. But new value is out of range, it will not move to upper level but display error pop-up window as below. When user closes pop-up, it will retain previous value.

- Fax Routines

Test routine window consists of list of test items.
Each item has Chain/Link and item name.
User can select multiple items by touching on the list.
But some items are exclusive and can't select at the same time.
If user touch some items but it is conflict with already selected item then it will not selected.

If user touches • • • button then drop down menu will be displayed as below.

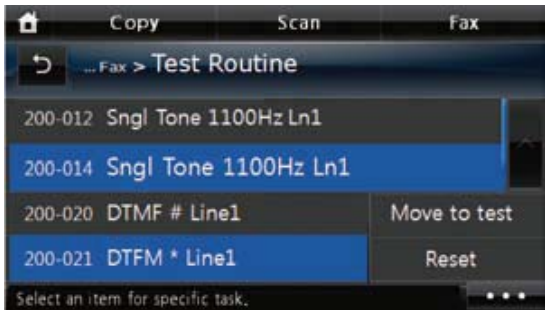

If user touch "Reset" then all the selected items will be de-selected.
If user touch "Move to test" button, then it will move to the window for executing test.
"Move to test" button shall be disabled if no item is selected.

On the test execution window, if user touches some item then test for touched item will start and background color will be changed to blue.
If user touch item which is on progress, then test will be stopped and background color will be revert back to gray.

During some items are on testing, if user touches • • • button then drop down menu will be displayed as below.
Drop down menu will have “Stop All” button.
If no items are on testing, then this button will be gray out.
If user touch “Stop All” button then all items will stop testing.

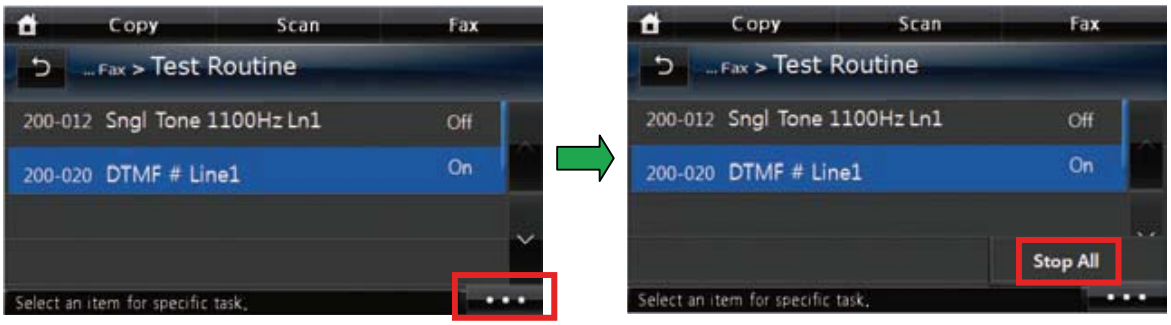

When user touches ↩ button, all testing item will be stopped and move to previous window.

- Protocol Report

If user touches “Protocol Report” then fax protocol dump report will be printed out.

c) Other

Other menu is consist of below sub items
- Print Test Pattern
- Shading Test
- Memory Clear
- Printer Setup

- Print Test Pattern

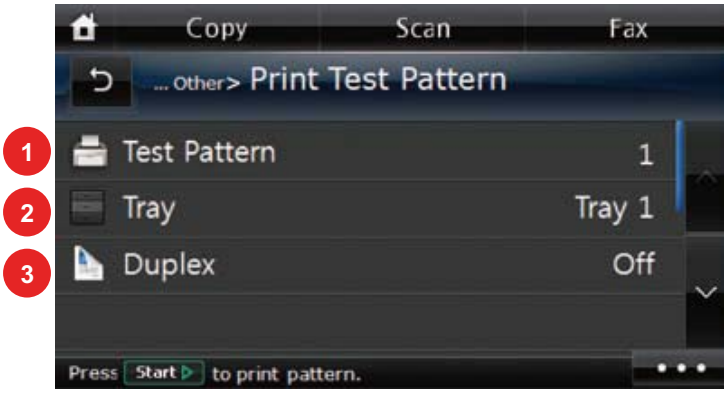

1 User can select the one among 7 test patterns. By default, Test Pattern number shall be 1.

2 User shall select paper source by selecting tray.

- Tray1
- Tray2
- MPF

3 User shall select duplex printing option by selecting on Duplex Menu

- Off
- 2Sided

If user press “Start” button then the test pattern will be printed.

- Shading Test

User can the shading test to check quality of scanned images, especially defect in optical devices, including lens, mirror, lamp, and etc, are suspected.

Press Start button beside “Share and Print report“ to see if the current shading value is correct.
Mono, red, green, blue gray shading values will be shown on the printed report.
When the previous shading value is needed, press Start button beside “Print Last Shade Report”.

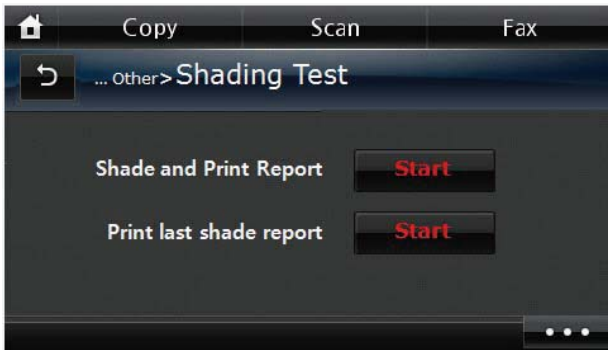

- Memory Clear

This function resets the main memory of the system to the factory default setting. It can be used to reset the system to the initial value when the product is functioning abnormally. All the user configured values return to the default values.

To clear the main memory, users need to select the country of the system locates, and rebooting of the system is required.

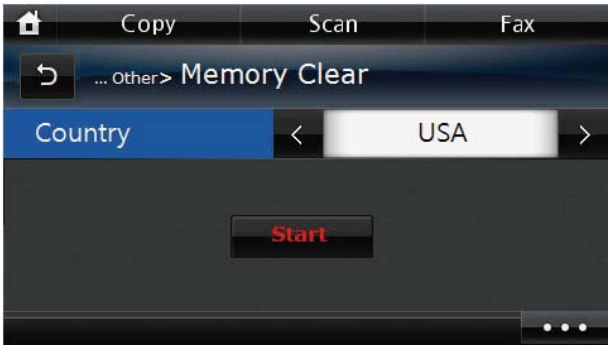

- Printer Setup

This menu has the Altitude Adjustment menu as sub menu.

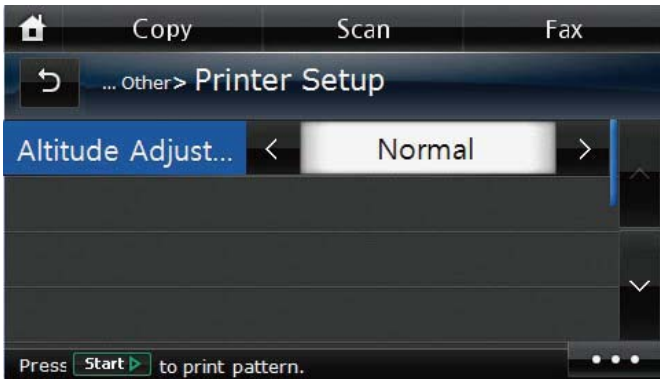

The print quality is affected by atmospheric pressure, which is determined by the height of the machine above sea level. The following information will guide you on how to set your machine to the best print quality or best quality of print. Before you set the altitude value, find the altitude where you are using the machine.

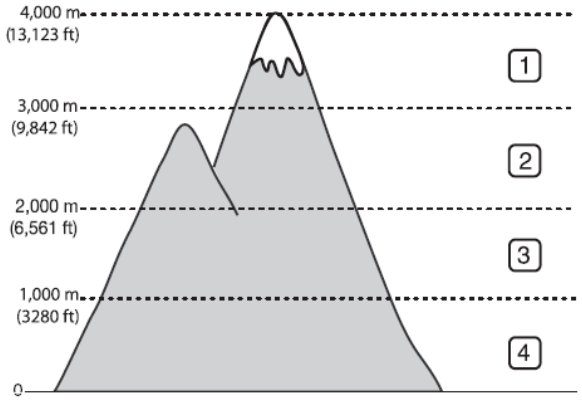

1	High 1
2	High 2
3	High 3
4	Normal

4.1.4 Abnormal Image Printing and Defective Roller

If abnormal image prints periodically, check the parts shown below.

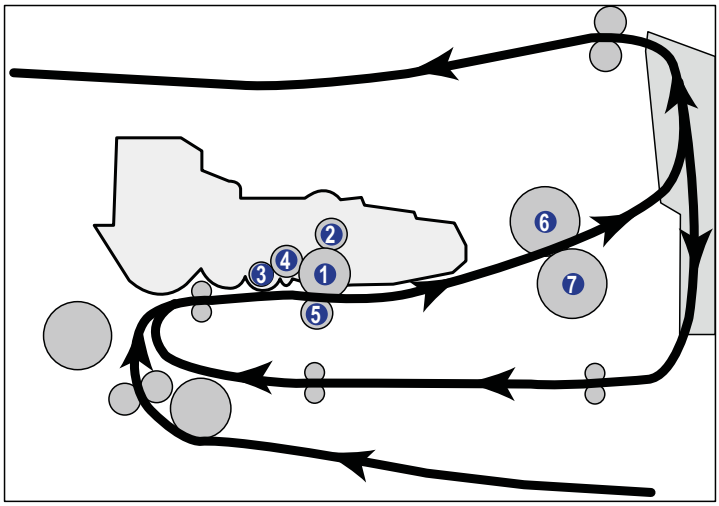

1. OPC Drum
2. Charge Roller
3. Supply Roller
4. Developing Roller
5. Transfer Roller
6. Heat Roller
7. Pressure Roller

No	Roller	Abnormal image period	Kind of abnormal image
1	OPC Drum	75.5mm	White spot, Block spot
2	Charge Roller	37.7mm	Black spot
3	Supply Roller	44.9mm	Horizontal density band
4	Develop Roller	35.2mm	Horizontal density band
5	Transfer Roller	47.1mm	Black side contamination/transfer fault
6	Heat Roller	77.8mm	Black spot and fuser ghost
7	Pressure Roller	75.4mm	Black side contamination

4.2 Troubleshooting

4.2.1 Procedure of Checking the Symptoms

Before attempting to repair the printer first obtain a detailed description of the problem from the customer.

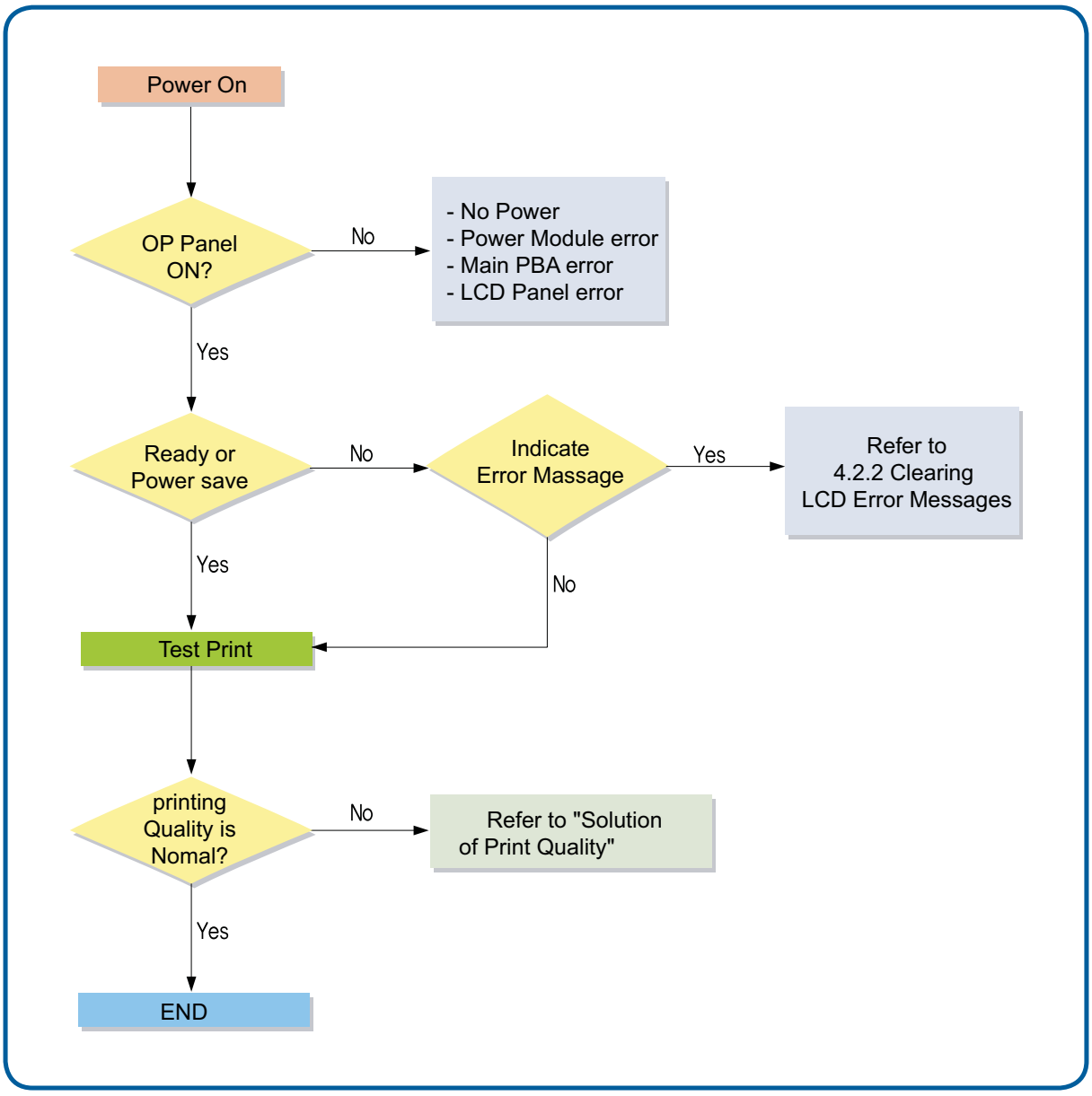

4.2.2 Clearing LCD Error Messages

Display message	Meaning	Suggested solutions
Rear Cover is open Close Rear Cover.	The rear door was opened while duplex printing	Close the rear door.
Data Read Fail Check USB key	Time expired while reading data.	Try again.
Data Write Fail Check USB key	Storing to the USB memory key failed.	Check the available USB memory space.
Device is not supported	Non USB mass storage device, such as USB mouse, is connected with USB memory port	Remove the non USB mass storage device from USB memory port.
Document Jam Check Feeder	The loaded document has jammed in the DADF.	Clear the document jam.
Toner Door is open Close Toner Door	The front cover is not securely latched.	Close the cover until it locks into place.
Duplex jam 0 Check Inside	Paper has jammed during duplex printing.	Clear the jam. See "Clearing Paper Jams"
Remove paper & Open/Close Front Door		
Duplex jam 1 Check Inside	Paper has jammed during duplex printing.	Clear the jam. See "Clearing Paper Jams"
Open Rear Door		
File format is not supported.	The selected file format is not supported.	Enter the correct item again.
Fuser Door Open	The fuser door is not securely latched.	Open the rear door and close the fuser door until it locks into place. For the location of the fuser door, see “Clearing Paper Jams”.
Open Rear Door Close Fuser Door		
Fuser Error Fuser Not Installed Check Rear Door	There is a problem in the fuser unit.	Unplug the power cord and plug it back in. If the problem persists, refer to the troubleshooting for Fuser Error.
Hub is not supported	USB hub device is connected with USB memory port.	Remove the USB hub device from USB memory port.
In Idle State : [yyy] Empty/Open In Printing State : [yyy] Empty/Open Load [zzz] [xxx]	The paper in the paper tray has run out.	Load paper in the paper tray.

Display message	Meaning	Suggested solutions
Invalid Cartridge Cartridge is not valid for this machine	The toner cartridge you have installed is not for your printer.	Install a Dell-genuine toner cartridge, designed for your printer.
IP Conflict IP address conflict.	The network IP address you have set is being used by someone else.	Check the IP address and reset it if necessary
Fax Job is completed with error Incompatiable	The received fax number is the number stored	Change the Junk Fax Setup option.
Job cannot be accepted because line is busy	The receiving party did not answer or the line is already engaged.	Try again after a few minutes.
Line Error	Your printer cannot connect with a remote printer or has lost contact because of a problem with the phone line. OR No dial tone sounds	- Try again. If the problem persists, please wait for an hour or try a different phone line if possible and then try to connect again. - Turn the ECM mode on. See ECM Mode. - Check that the phone line is connected properly. - Check that the phone socket in the wall is working by plugging in another phone.
Check Fax Line		
Fax Job is completed with error : Line Error	The printer has a communication problem.	Ask the sender to try again.
Low Heat Error Power Cycle	There is a problem in the fuser unit.	Unplug the power cord and plug it back in. If the problem persists, refer to the troubleshooting for Fuser Error.
LSU Hsync Error Power Cycle	A problem has occurred in the Laser Scanning	1. Unplug the power cord and plug it back in. 2. Check if the connection between the LSU and the main board is correct. 3. If the problem persists, replace the LSU.
Email Job is completed with error : Mail excced server support	The mail size is larger than the supported size by SMTP server.	Divide your mail or reduce the resolution.
Email Job is completed with error : Mail too large	Single page data exceeds the configured mail size.	Reduce the resolution and try again.
Memory Full	The memory is full.	Delete unnecessary documents, retransmit after more memory becomes available.

Display message	Meaning	Suggested solutions
Fax Job is completed with error : Memory Full	The memory is full.	- Split the transmission into more than one operation. - Print received faxes. - Cancel reserved fax in the Priority Fax feature.
MPF Empty Load [zzz] [xxx] Press √ Continue	The paper in the MPF has run out.	Load paper in the MPF.
Network Cable Error Network cable is disconnected.	The network cable is disconnected.	Connect the network cable.
Network Card Error Network card is not installed.	The network card is not installed.	Install the network card.
Fax Job is completed with error : No Answer	The remote fax machine has not answered after several redial attempts.	Try again. Verify the number to ensure that a fax can be received.
No Toner Cartridge Toner Cartridge is not installed	The toner cartridge is not installed.	If the toner cartridge is not installed in the machine, install the toner cartridge.
Over Heat Error Power Cycle	There is a problem in the fuser unit.	Unplug the power cord and plug it back in. If the problem persists, refer to the troubleshooting for Fuser Error.
Paper Jam 0 Open Front Door Open Tray 1 Remove paper & Open/ Close Front Door	Paper has jammed in the feeding area of the paper tray.	Clear the jam. See "Clearing Paper Jams"
Paper Jam 1 Remove Cartridge	Paper has jammed in the fuser area.	Clear the jam. See "Clearing Paper Jams"
Paper Jam 2 Check Inside Open Rear Door	Paper has jammed in the paper exit area.	Clear the jam. See "Clearing Paper Jams"
Scanner locked Unlock scanner Pull blue latch forward & Press >	The scanner module is locked.	Unlock the scanner and press Cancel (X).
Self Diagnostic... Please wait	The engine in your printer is checking some problems detected.	Please wait a few minutes.
Email Job is completed with error : DNS Error	There is a problem in DNS.	Configure the DNS setting.
Email Job is completed with error : Pop3 Error	There is a problem in POP3.	Configure the POP3 setting.

Display message	Meaning	Suggested solutions
Email Job is completed with error : Send Failed	There is a problem in SMTP.	Change to the available server.
Email Job is completed with error : Authentication Failure	There is a problem in SMTP authentication.	Configure the authentication setting.
Email Job is completed with error : Network Error	There is a problem on the network interface card.	Configure your network interface card correctly.
Email Job is completed with error : Server Connection Error	Connection with the SMPT server failed.	Check that the network cable is connected properly. OR Contact your SMPT server administrator.
[yyy] is empty or open Load paper or close [yyy].	There is no paper in the tray.	Load paper in the tray.
Toner Almost Empty Replace Toner	The toner cartridge is empty.	Replace the toner cartridge with a new one.
Toner Low Order New Toner	The toner cartridge is almost empty.	Take out the toner cartridge and thoroughly shake it. By doing this, you can temporarily reestablish printing operations. OR Replace the toner cartridge with a new one for the best print quality.
Waiting Line	The machine is waiting for the programmed interval to automatically redial.	Please wait a few minutes.

4.2.3 Solution

4.3.2.1 Scanner

4.3.2.1(a)COPY

PROBLEM	ITEMS TO BE CHECKED	HOW TO SOLVE
White copy	• Check the Scan-Cover open.	• Room light can transit a thin original.
	• Check shading profile.	• Execute the shading test in the diagnostic mode.
Black copy	• Check the CCD problem in Main PBA.	• Check the CCD harness contact.
	• Check shading profile.	• Execute the shading test in the diagnostic mode.
Defective image quality	• Check shading profile. • Check the gap between original and scanner.	• Execute the shading test in the diagnostic mode. • The gap above 0.5mm can cause a blurred image.
	• Check printing quality.	• See “Print” troubleshooting.
Abnormal noise	• Check the Scanner Motor and any mechanical disturbance.	• Check the right position of the Scanner Motor, and check the any mechanical disturbance in the CCD carriaging part.
	• Check the Motor Driver in Driver PBA.	• If any driver is defective, replace it.

4.3.2.1(b) PC-Scan

PROBLEM	ITEMS TO BE CHECKED	HOW TO SOLVE
Scanning Error	• Check the printer cable installed.	• Check correct installation, and use standard USB cable.
	• Check how TWAIN driver is installed.	• Remove any other scanner driver. • Reboot after reinstallation of the TWAIN driver.
	• Check the USB signal level.	• If USB signal level is defective, replace Main PBA.
Defective image Quality	• Check shading profile. • Check the gap between original and scanner glass.	• Execute the shading test in the diagnostic mode. • The gap above 0.5mm can cause a blurred image.
	• Check printing quality.	• See “Print” troubleshooting.
Abnormal noise	• Check the Scanner Motor and any mechanical disturbance.	• Check the right position of the Scanner Motor, and check the any mechanical disturbance in the CCD carriaging part.
	• Check the Motor Driver in Driver PBA.	• If any driver is defective, replace it.

4.3.2.2 FAX

4.3.2.2(a) FAX/TELEPHONE Precautions

PROBLEM	ITEMS TO BE CHECKED	HOW TO SOLVE
TEL LINE CANNOT BE ENGAGED (NO DIAL TONE)	• When you press " OHD" key: a) Check line cord connection.	a) insert it correctly into the connection jack called "line". b) Replace defective parts.
Cannot MF dial	• Check MAIN-LIU harness.	• Replace defective parts.
MF dial is possible but not DP dial.	• Check the main PBA.	• Replace main PBA.
Defective fax transmission	• Check MAIN LIU harness. • Check 'hook off' : Refer to 'TEL LINE CANNOT BE ENGAGED' above.	• Replace defective parts. • Refer to 'TEL LINE CANNOT BE ENGAGED' above. • Replace main PBA, if abnormal.
Defective automatic fax reception	• Is the ring checked? • Refer to 'Defective Transmission.'	• Refer to 'Defective Transmission'.

No Image

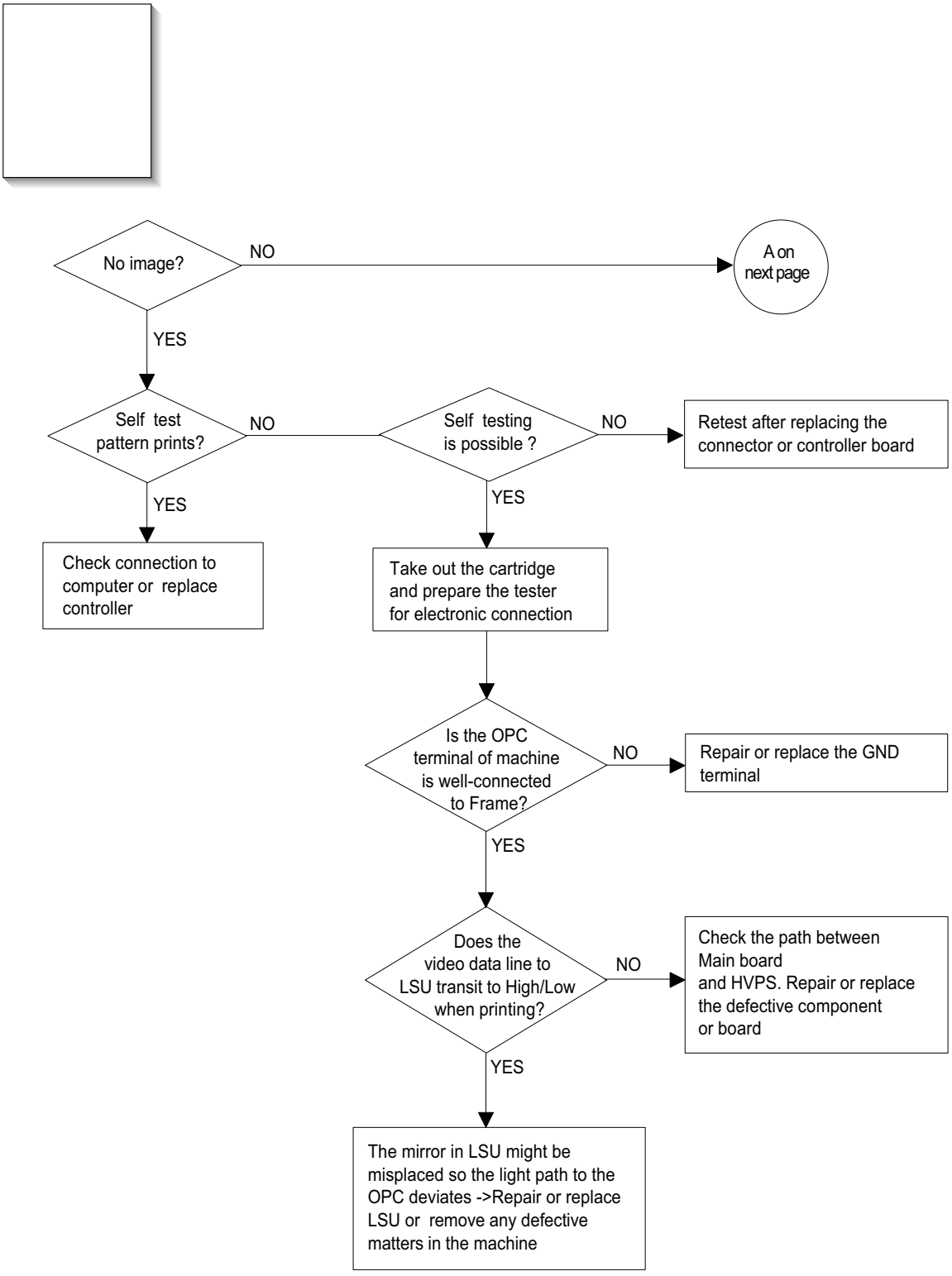
No image?
NO
A on next page
YES
Self test pattern prints?
NO
Self testing is possible ?
NO
Retest after replacing the connector or controller board
YES
YES
Check connection to computer or replace controller
Take out the cartridge and prepare the tester for electronic connection
Is the OPC terminal of machine is well-connected to Frame?
NO
Repair or replace the GND terminal
YES
Does the video data line to LSU transit to High/Low when printing?
NO
Check the path between Main board and HVPS. Repair or replace the defective component or board
YES
The mirror in LSU might be misplaced so the light path to the OPC deviates ->Repair or replace LSU or remove any defective matters in the machine

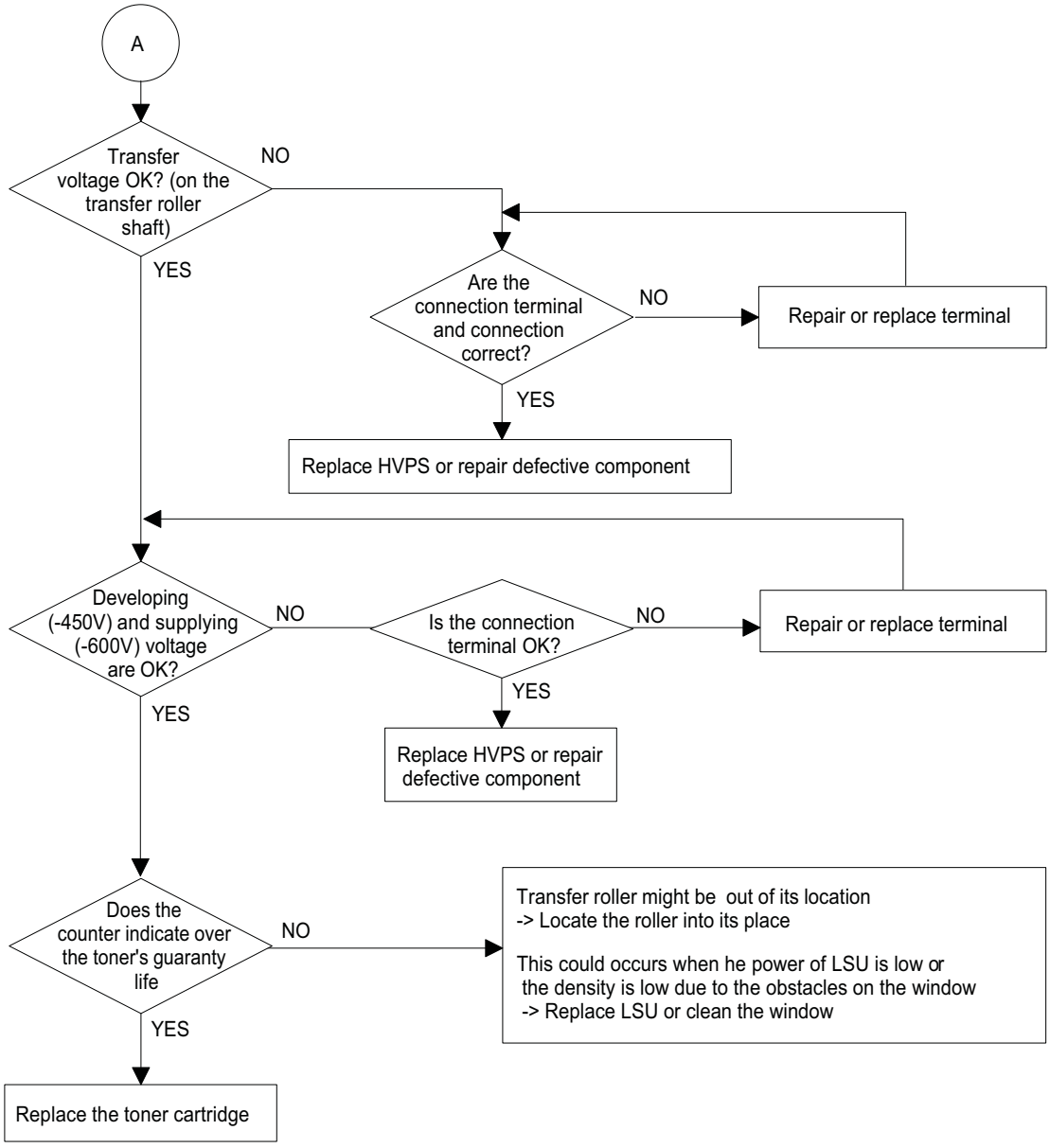
A
Transfer voltage OK? (on the transfer roller shaft)
NO
YES
Are the connection terminal and connection correct?
NO
Repair or replace terminal
YES
Replace HVPS or repair defective component
Developing (-450V) and supplying (-600V) voltage are OK?
NO
Is the connection terminal OK?
NO
Repair or replace terminal
YES
YES
Replace HVPS or repair defective component
Does the counter indicate over the toner's guaranty life
NO
Transfer roller might be out of its location
-> Locate the roller into its place
This could occurs when he power of LSU is low or
the density is low due to the obstacles on the window
-> Replace LSU or clean the window
YES
Replace the toner cartridge

All Black

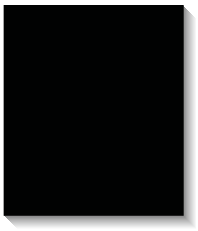

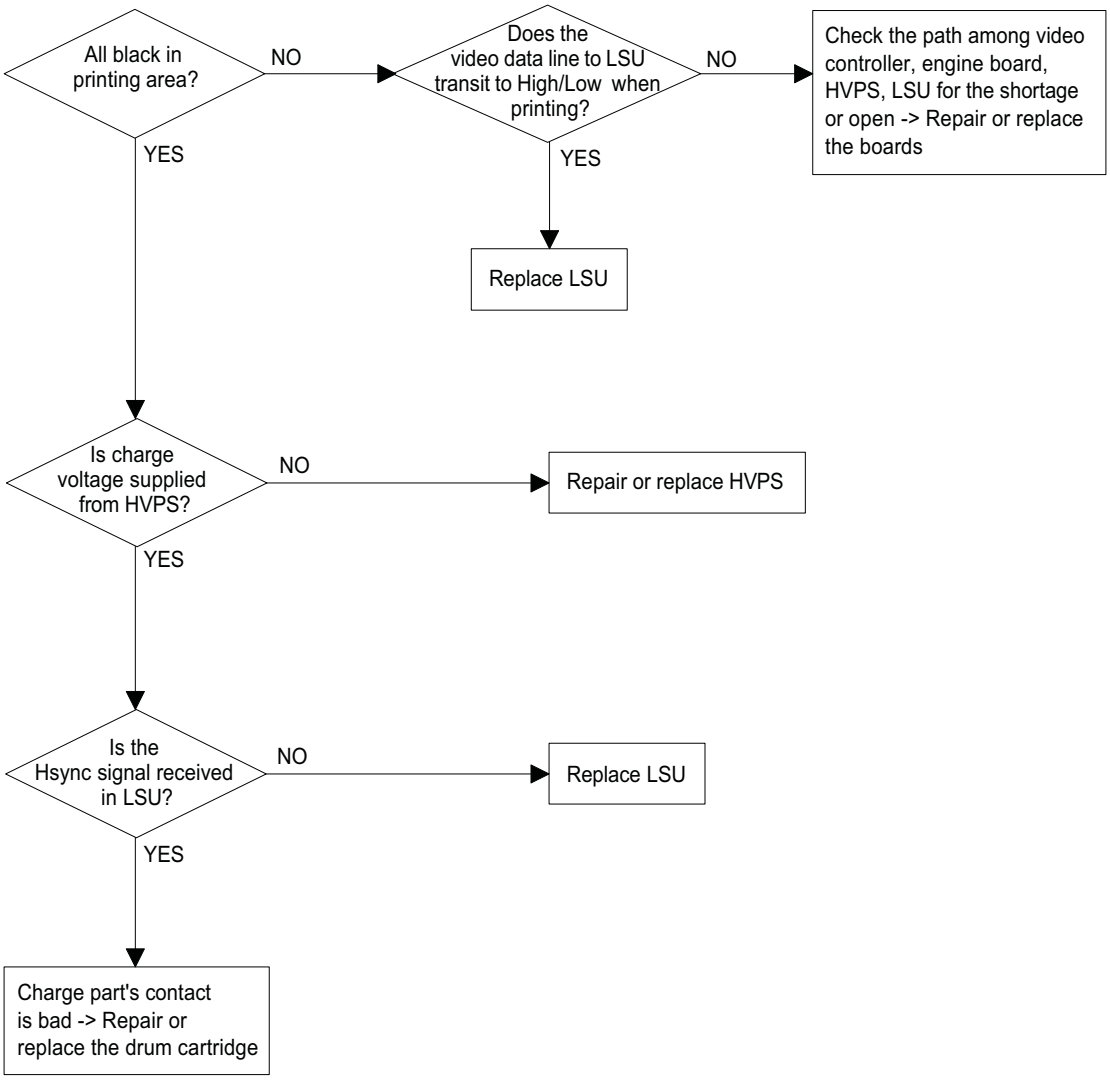
All black in printing area?
NO
Does the video data line to LSU transit to High/Low when printing?
NO
Check the path among video controller, engine board, HVPS, LSU for the shortage or open -> Repair or replace the boards
YES
YES
Replace LSU
Is charge voltage supplied from HVPS?
NO
Repair or replace HVPS
YES
Is the Hsync signal received in LSU?
NO
Replace LSU
YES
Charge part's contact is bad -> Repair or replace the drum cartridge

Vertical White Line (Band)

Digital Printer
Digital Printer
Digital Printer
Digital Printer
Digital Printer

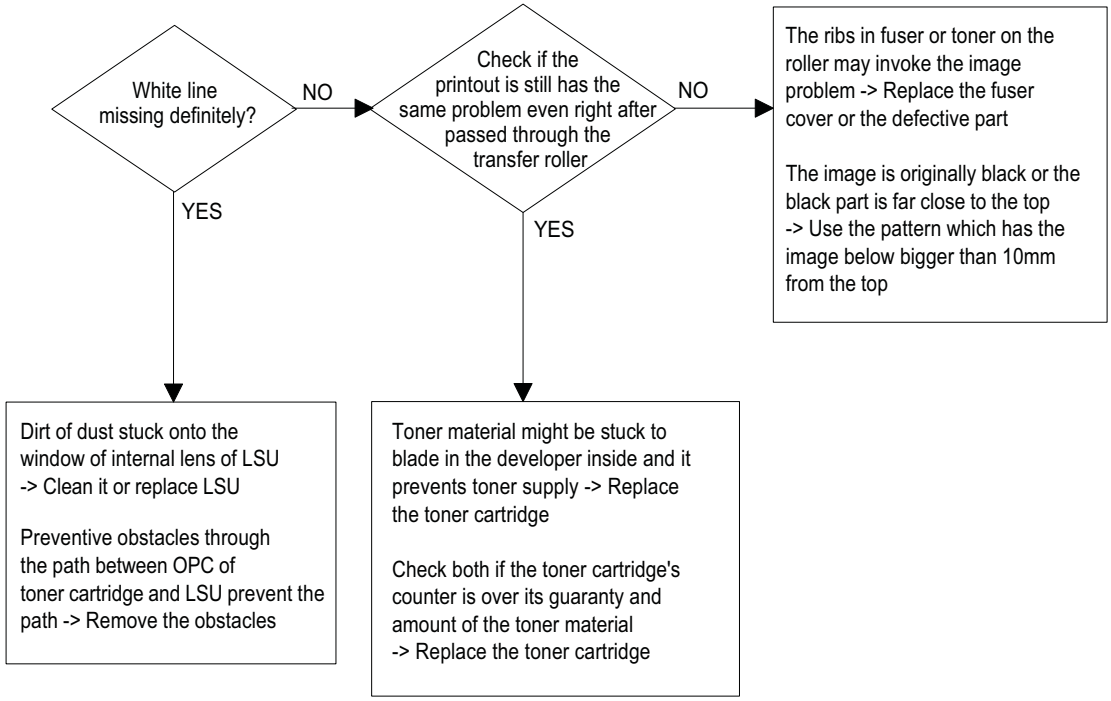

Dark Image

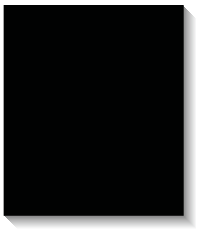

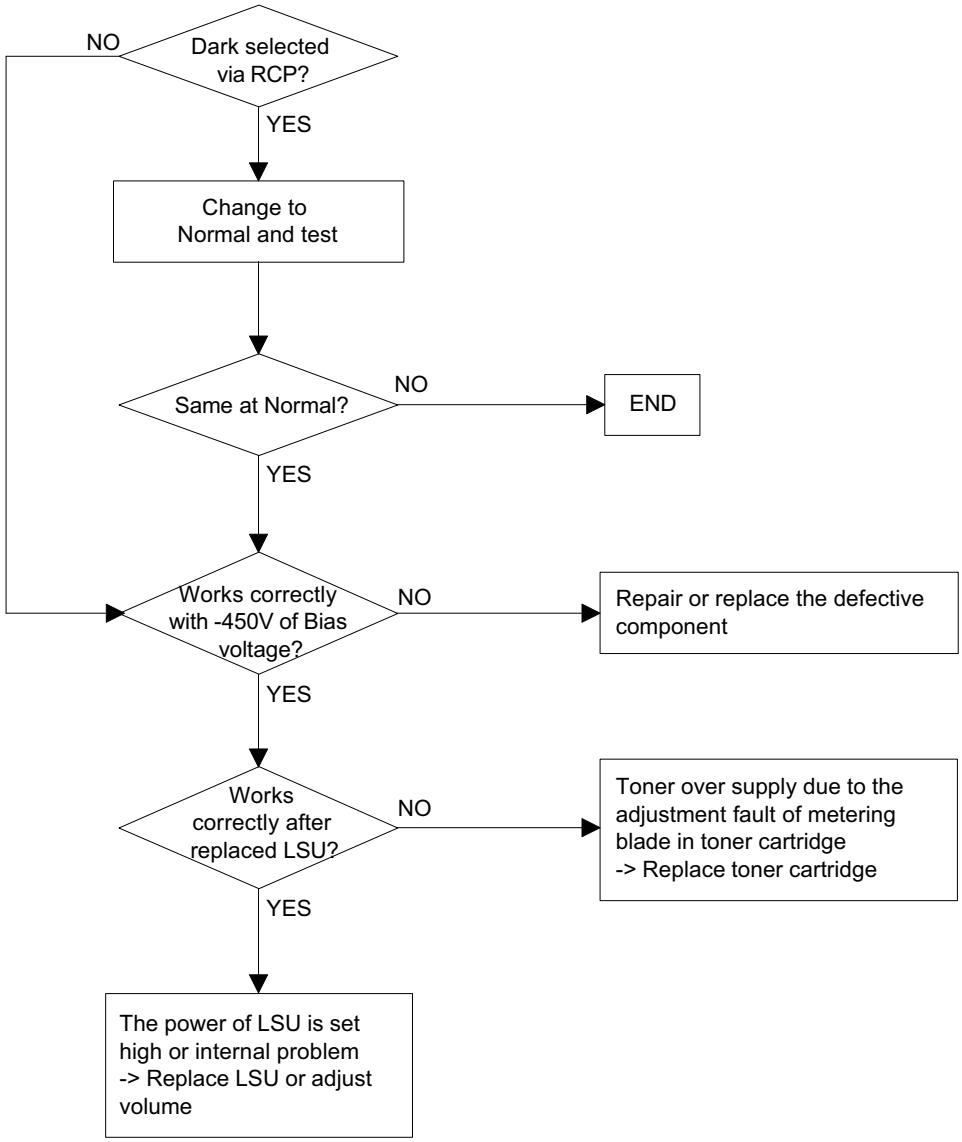
Dark selected via RCP?
NO
YES
Change to Normal and test
Same at Normal?
NO
END
YES
Works correctly with -450V of Bias voltage?
NO
Repair or replace the defective component
YES
Works correctly after replaced LSU?
NO
Toner over supply due to the adjustment fault of metering blade in toner cartridge
-> Replace toner cartridge
YES
The power of LSU is set high or internal problem
-> Replace LSU or adjust volume

Barkground

Digital Printer
Digital Printer
Digital Printer
Digital Printer
Digital Printer

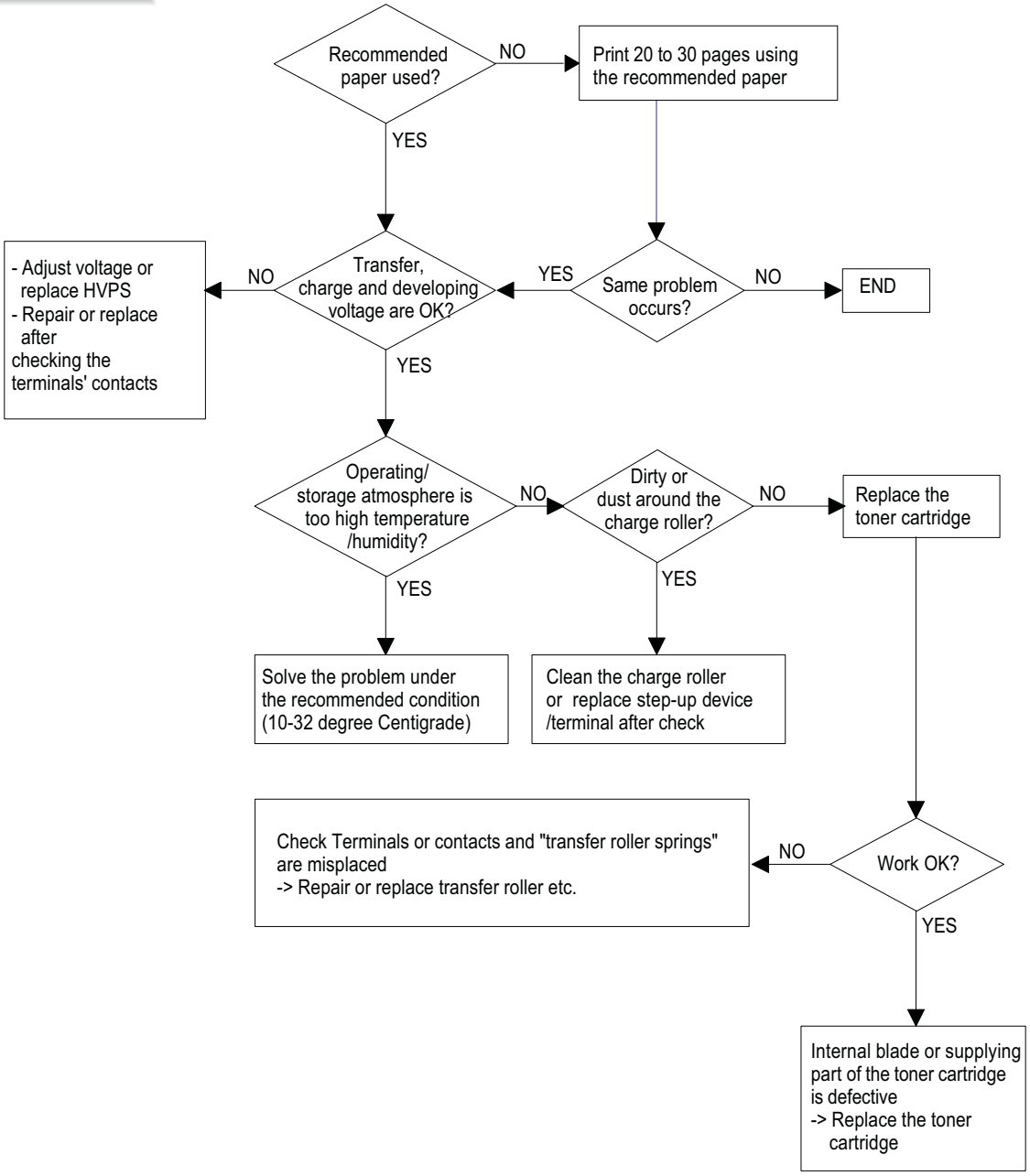

Ghost

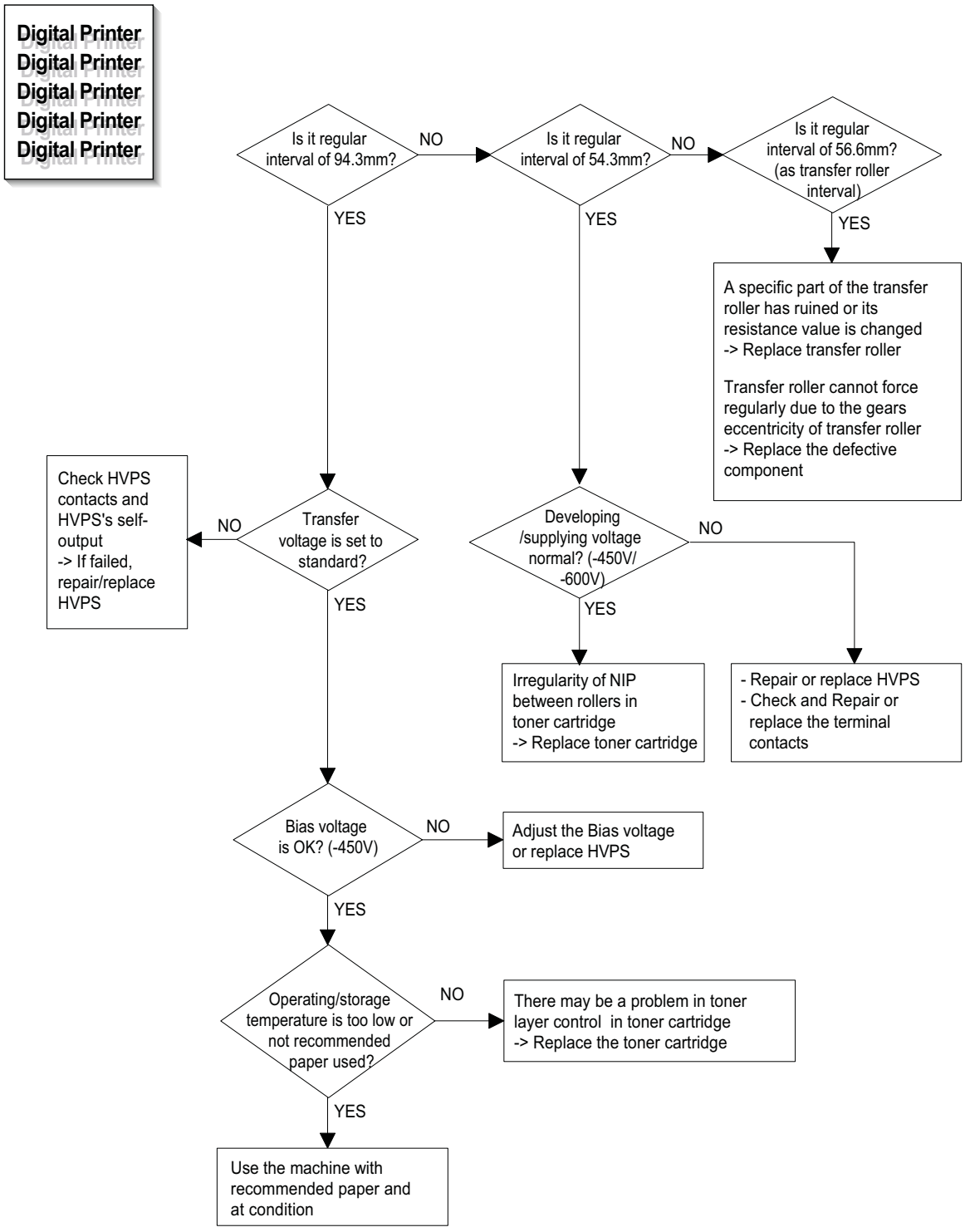
Digital Printer
Digital Printer
Digital Printer
Digital Printer
Digital Printer
Is it regular interval of 94.3mm?
NO
Is it regular interval of 54.3mm?
NO
Is it regular interval of 56.6mm? (as transfer roller interval)
YES
YES
YES
A specific part of the transfer roller has ruined or its resistance value is changed
-> Replace transfer roller
Transfer roller cannot force regularly due to the gears eccentricity of transfer roller
-> Replace the defective component
Check HVPS contacts and HVPS's self-output
-> If failed, repair/replace HVPS
NO
Transfer voltage is set to standard?
YES
Developing /supplying voltage normal? (-450V/ -600V)
NO
YES
Irregularity of NIP between rollers in toner cartridge
-> Replace toner cartridge
- Repair or replace HVPS
- Check and Repair or replace the terminal contacts
Bias voltage is OK? (-450V)
NO
Adjust the Bias voltage or replace HVPS
YES
Operating/storage temperature is too low or not recommended paper used?
NO
There may be a problem in toner layer control in toner cartridge
-> Replace the toner cartridge
YES
Use the machine with recommended paper and at condition

Black Spot

Digital Printer
Digital Printer
Digital Printer
Digital Printer
Digital Printer

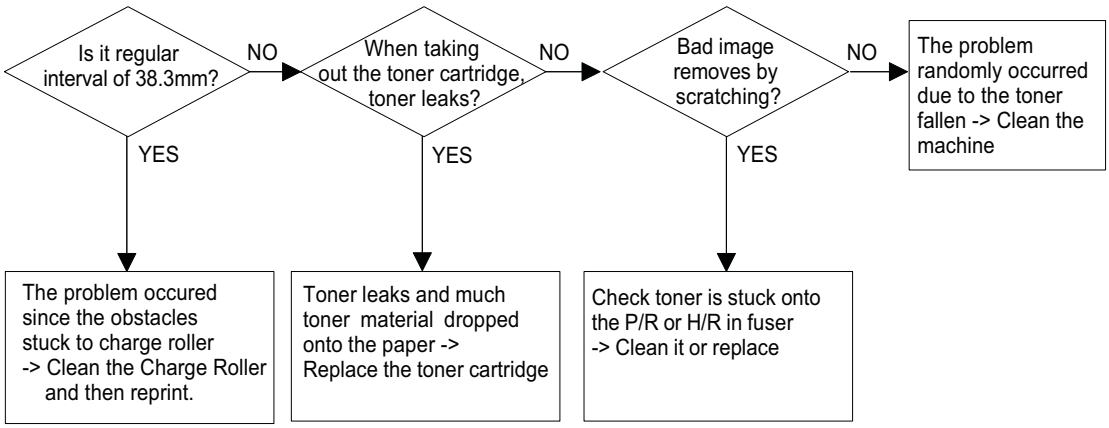
Is it regular interval of 38.3mm?
NO
When taking out the toner cartridge, toner leaks?
NO
Bad image removes by scratching?
NO
The problem randomly occurred due to the toner fallen -> Clean the machine
YES
YES
YES
The problem occured since the obstacles stuck to charge roller -> Clean the Charge Roller and then reprint.
Toner leaks and much toner material dropped onto the paper -> Replace the toner cartridge
Check toner is stuck onto the P/R or H/R in fuser -> Clean it or replace

Horzontal Band

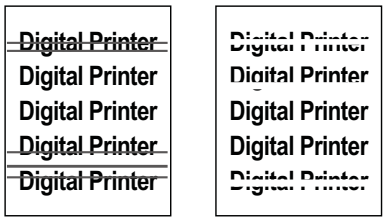

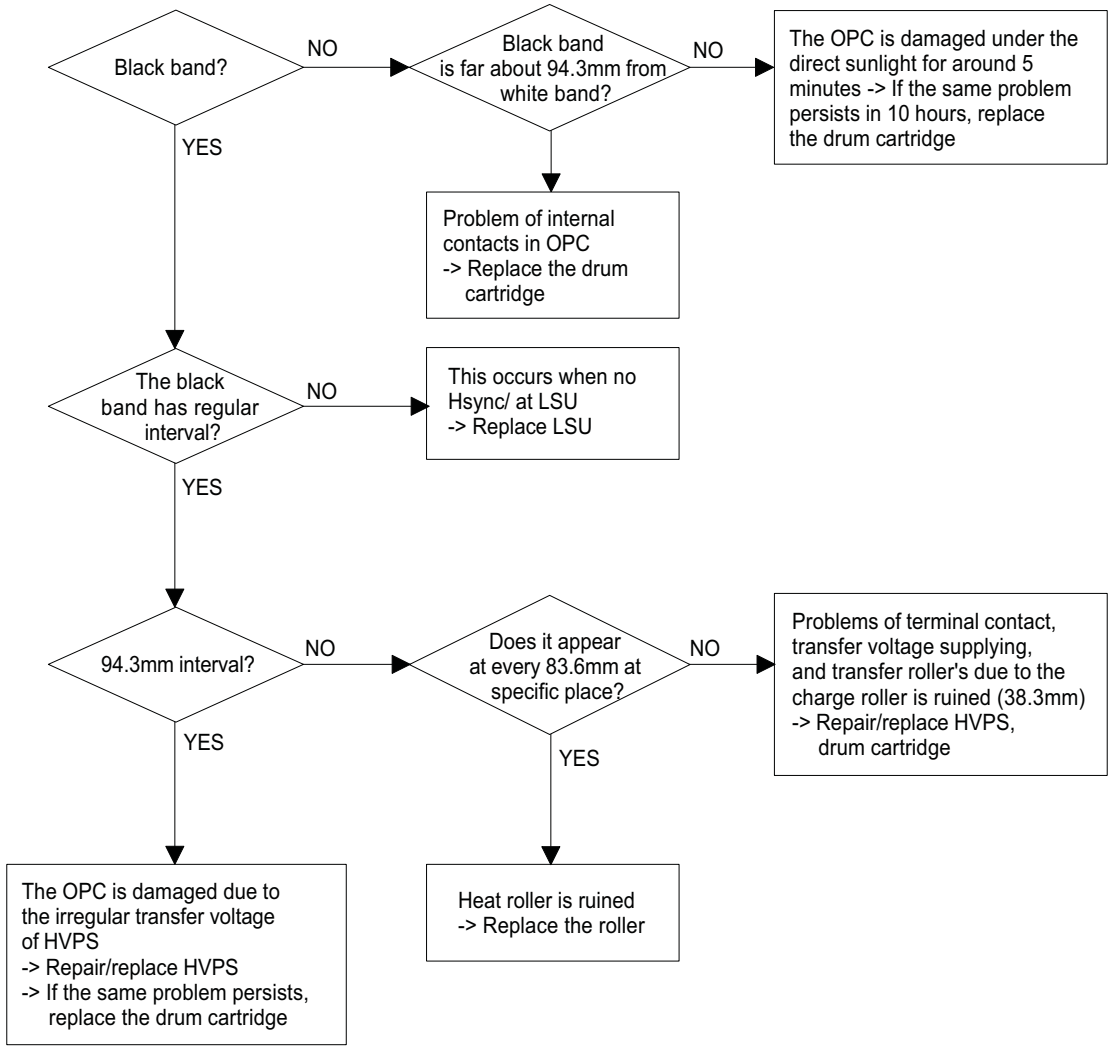

Irregular Density

Digital Printer
Digital Printer
Digital Printer
Digital Printer
Digital Printer

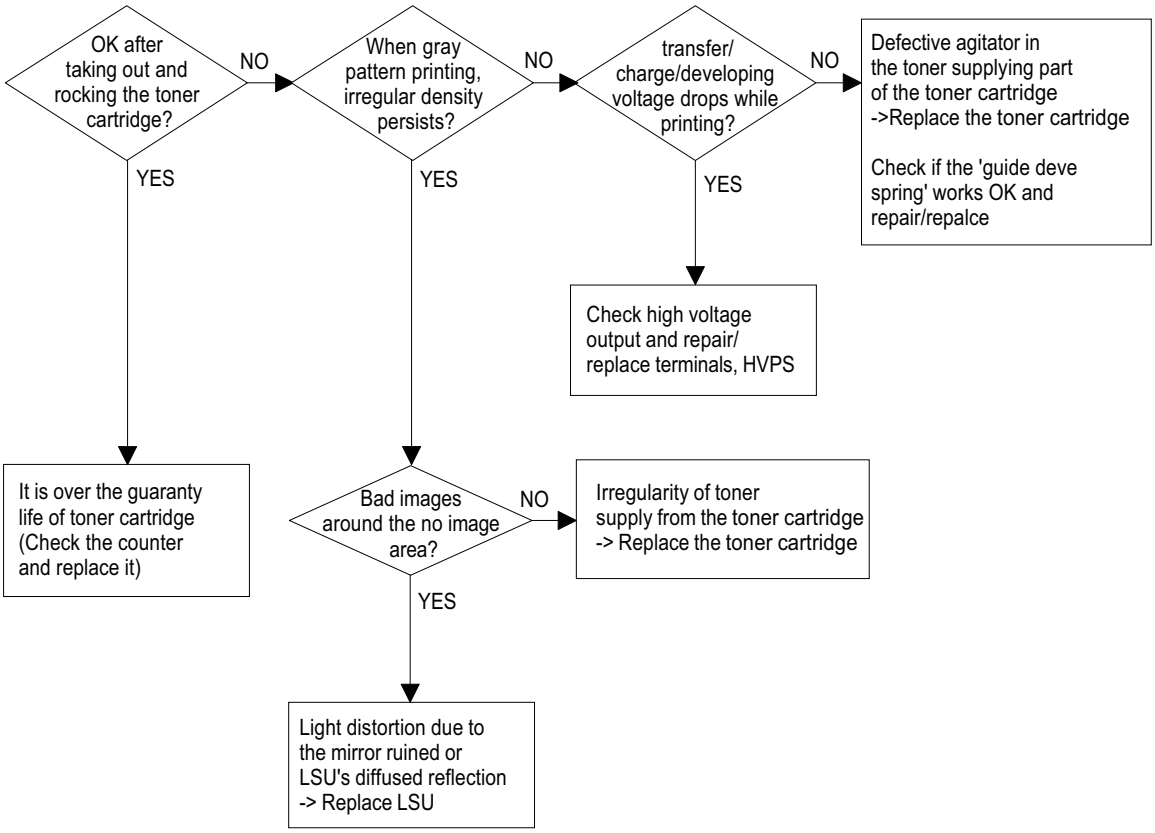

White Spot

Digital Printer
Digital Printer
Digital Printer
Digital Printer
Digital Printer

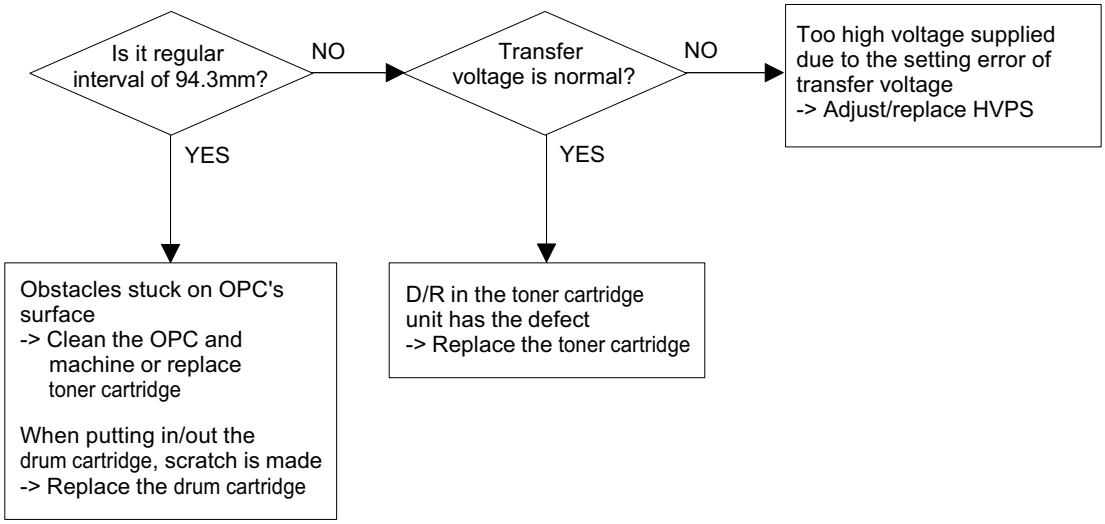
Is it regular interval of 94.3mm?
NO
Transfer voltage is normal?
NO
Too high voltage supplied due to the setting error of transfer voltage
-> Adjust/replace HVPS
YES
YES
Obstacles stuck on OPC's surface
-> Clean the OPC and machine or replace toner cartridge
When putting in/out the drum cartridge, scratch is made
-> Replace the drum cartridge
D/R in the toner cartridge unit has the defect
-> Replace the toner cartridge

Trembling at the End When OHP Printing

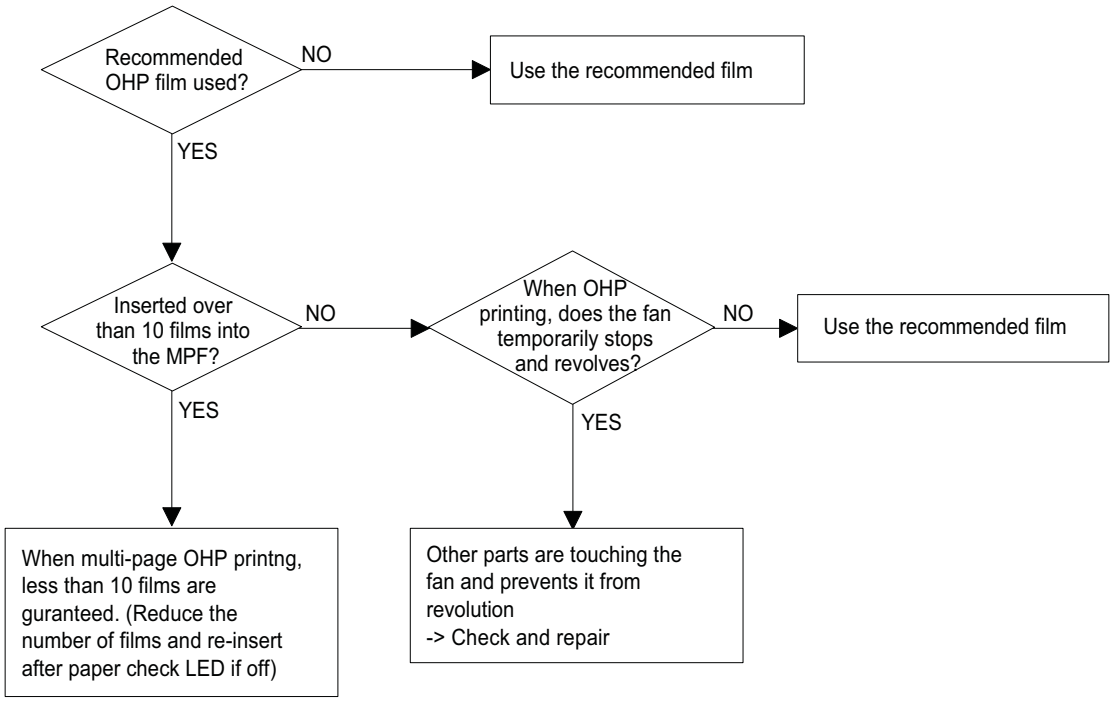

Poor Fusing Grade

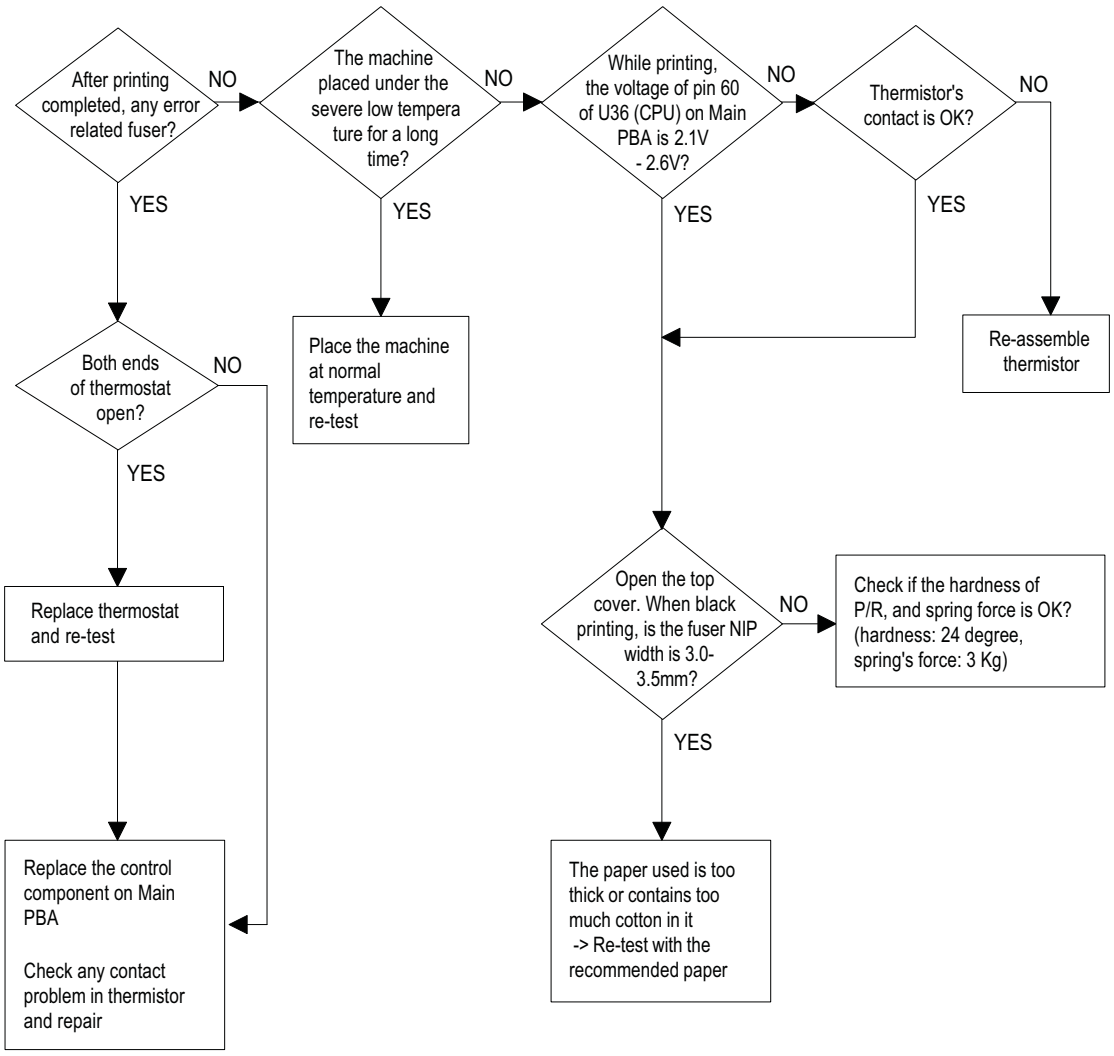

4.3.2.4 Malfunction

Error Status	Check	Solution
Cover open	1. When close Side cover, check the lever is pressed 2. Micro switch's contact 3. CPU and related circuit	1. Open Side cover and press the lever with pen. If Controller detects cover close, there is some mechanical trouble in Side cover and lever's assembly. If not so there is electrical problem.
Jam 0	Check where Jam 0 happens 1. Paper is not picked up 2. Paper is located in feed sensor 3. Happened when inserting specific papers such as envelope into the MPF (Multipurpose Paper Feeder)? 4. Happened when inserting specific papers such as envelope into the Manual Feeder? 5. Is the Stacker Extender is folded out? 6. Does not the Guide Adjust distort the papers	1. Check whether solenoid is working or not by using Engine test mode 2. Check feed sensor malfunction. 3. Re-try inserting a fewer papers. • fan the papers and align • take out the loaded papers and insert them reverse direction 4. Take out the loaded papers and insert them reverse direction • inserted papers as recommended for Manual Feeding? • When loading, tap the papers until paper detect sensor senses loading 5. When using long papers, use the Stacker Extender 6. Adjust Guide to fit the paper width
Jam 1	Paper is stopped in just after of fuser unit.	1. It is mostly resulted from double feeding. Check paper is well stocked in feeder. 2. Check feed actuator position and actuator's operating. There may be stiff movind or double reflection. If not so, check the operation of feed sensor by Engine test mode. 3. Check exit lever operation. Remore jam and check actuator moving by hand. If actuator is too stiff, paper is wrapped around the heat roller. Remove obstacles or replace.
Jam 2	Check where Jam 2 happens 1. Paper is curled and cannot exit. 2. Paper is curled in the exit cover?	1. Remove paper using pinset or some tool and watch if separate claws have any troble. Clean around fuser. 2. Check locking works wells. Watch whether the ribs of exit cover hace any burr or resisitive edge. If they do, remove obstacles or replace.
Jam 2 at face-down tray	1. Then paper is not drawn in because of the stack of papers in the Out tray. 2. Does it curl while coming out?	1. Load recommended quantity of papers 2. Open the Cover Front and check whether roller or spring, which are related to paper out, is not out of position. If so, re-locate or replace.

Error Status	Check	Solution
Clutch error	1. Check the spring of solenoid 2. Check the armature assembly/ cushion 3. Electrical check	1. Check whether the spring is expanded or not. 2. Check armature is well installed. It may be unstable assemble. 3. Remove the Main PBA.
High voltage error	1. Check the terminal output voltage 2. Check HVPS	1. Remove the Toner cartridge and open the cover and press cover open switch lever and measure the voltage with high voltage probe and sending printing data. If the voltage is normal, change the toner cartridge. 2. Disassemble the left side cover, and check HV of the solder side of HVPS and change it.
Feeding obstacles	Does the Plate-knockup prevent the paper loading?	MPF : Turn the power off and on. Open and close the Side cover to return to the original state. Cassette : Adjust Guide to fit the paper width.
Skew	Is the Guide adjust set to the paper width?	Fit the paper width using the Guide adjust.
Stacking	1. Took out the Stacker extender to support long papers? 2. Stacked too many papers more than Stacker can hold?	1. Use extender as per the paper length. 2. The Face-up stacker normally can hold 100 pages when using 75g/m2, however, stacking capacity can be lowered depending on the type of papers.
Engine Error	Check CBF Harness_CN7.(Main PBA to LSU)	Refer to troubleshooring “ENGINE ERROR”.
Document Jam	Document is not picked up(in ADF).	1. Check document is well stocked in ADF. 2. Check whether document was been fastened together by staple or clip. 3. Load recommended quantity of papers.
	Document is stopped after it has fed into the ADF.	1. Check whether the Reg. sensor is working or not. 2. Check whether the Feed Roller is working or not.
	Does it curl while coming out?	1. Check the Open Cover whether there are bosses. 2. Check the ADF ass’y is well assemble.

No Power (LCD NO display LED Off)

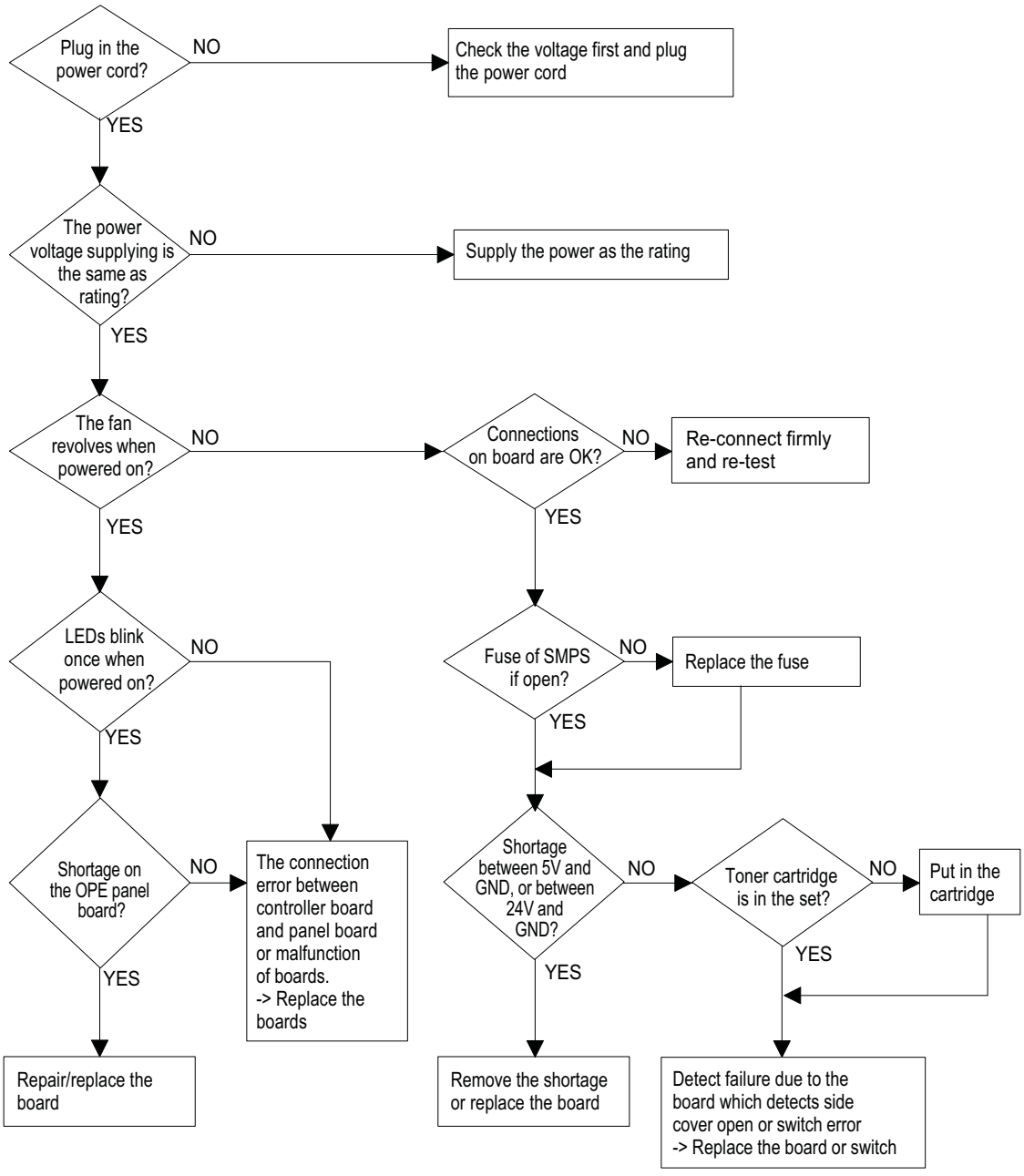

Fuser Error

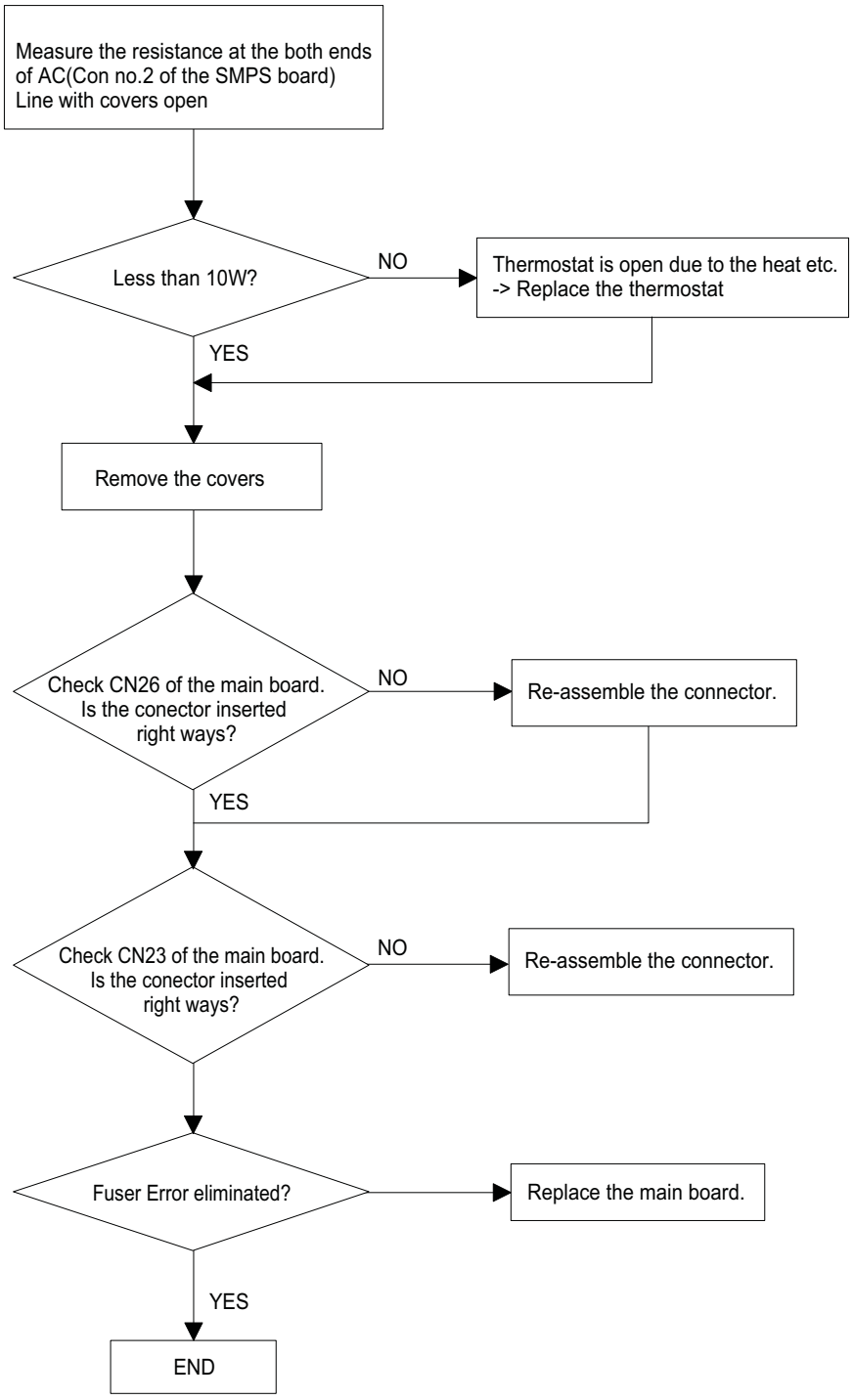
Measure the resistance at the both ends of AC(Con no.2 of the SMPS board) Line with covers open
Less than 10W?
NO
Thermostat is open due to the heat etc. -> Replace the thermostat
YES
Remove the covers
Check CN26 of the main board. Is the conector inserted right ways?
NO
Re-assemble the connector.
YES
Check CN23 of the main board. Is the conector inserted right ways?
NO
Re-assemble the connector.
Fuser Error eliminated?
Replace the main board.
YES
END

Paper Jam (Mis-Feeding)

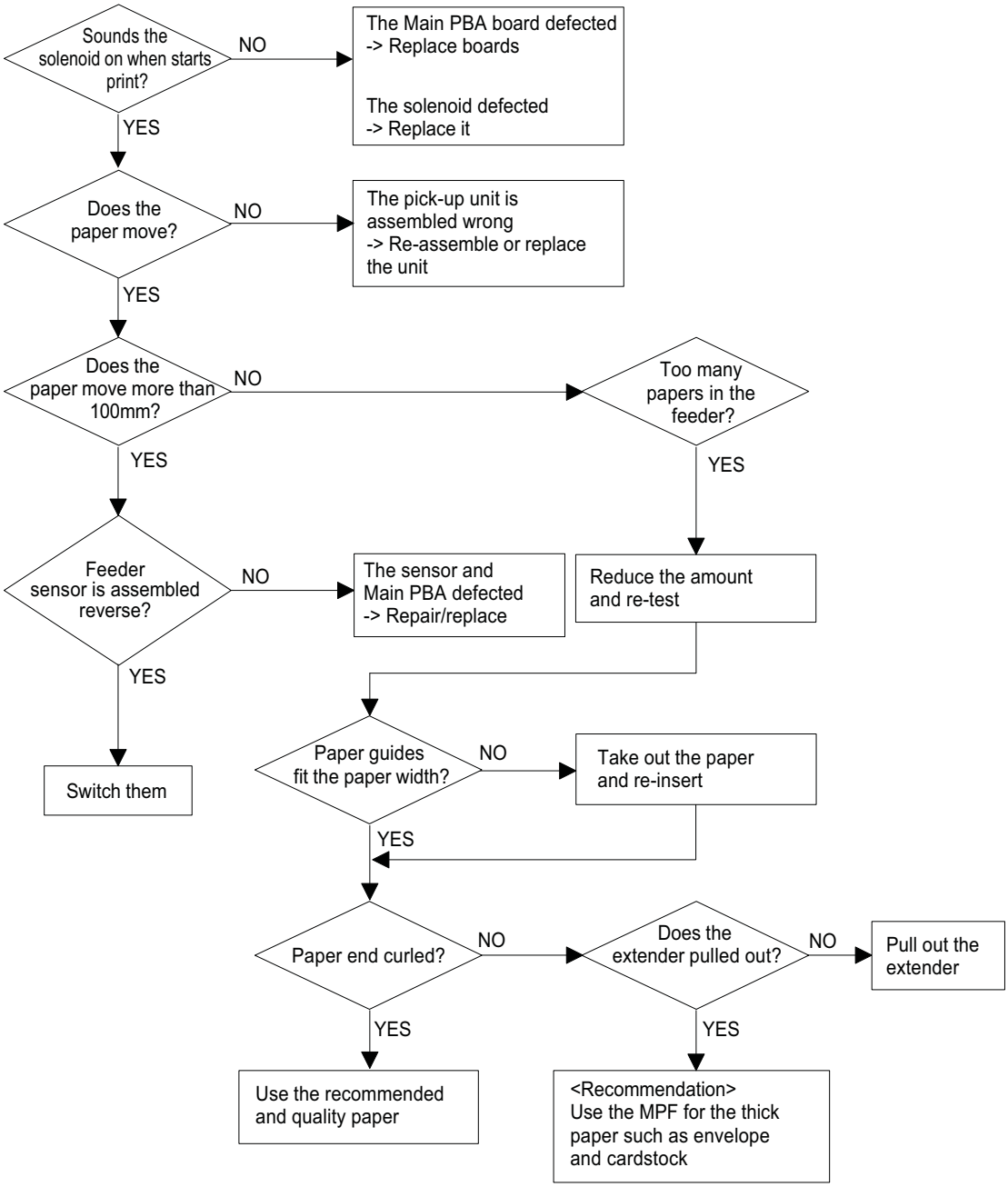

Paper Jam (Jam 1)

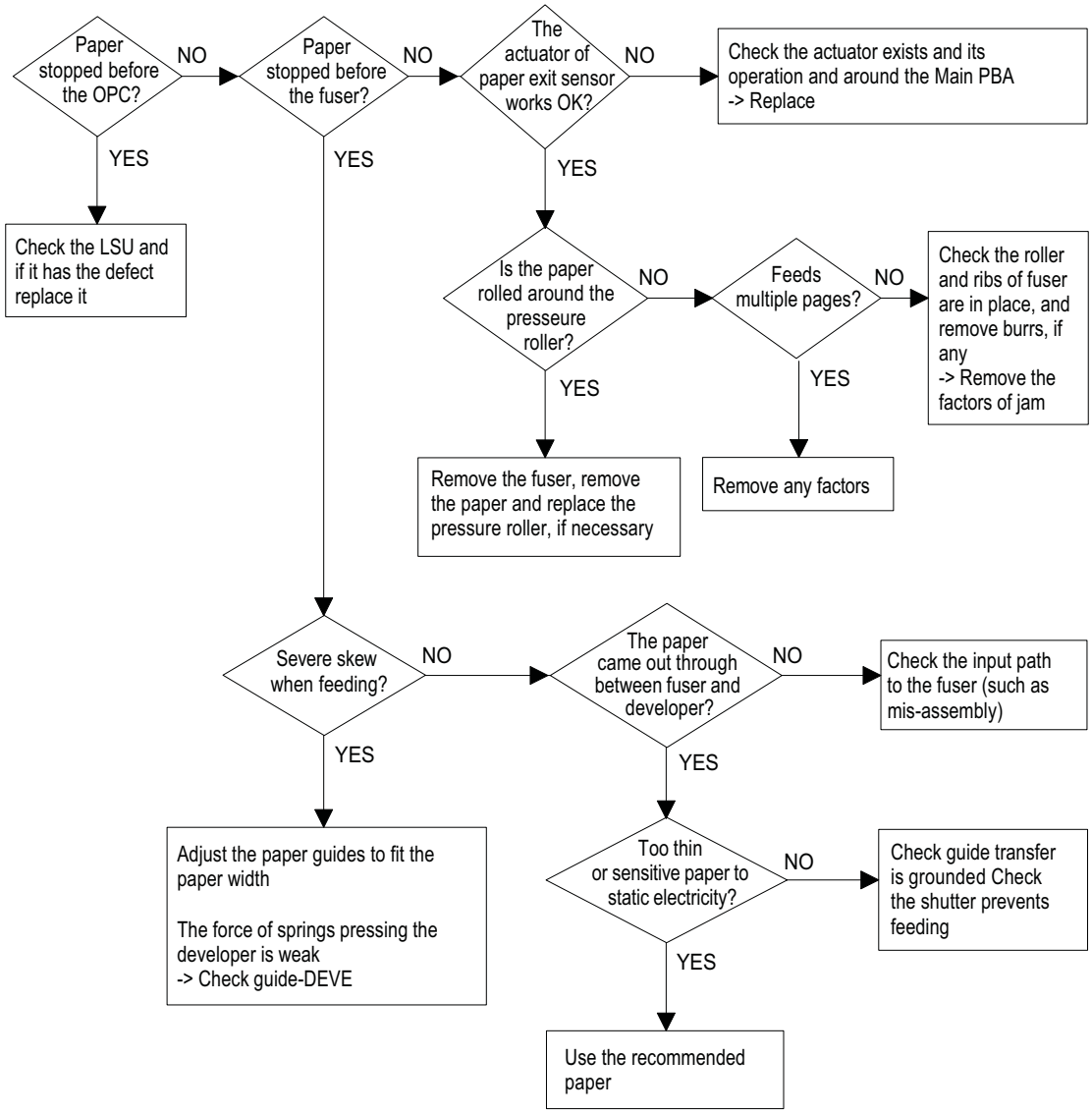

5. System Diagram

5.1 Block Diagram

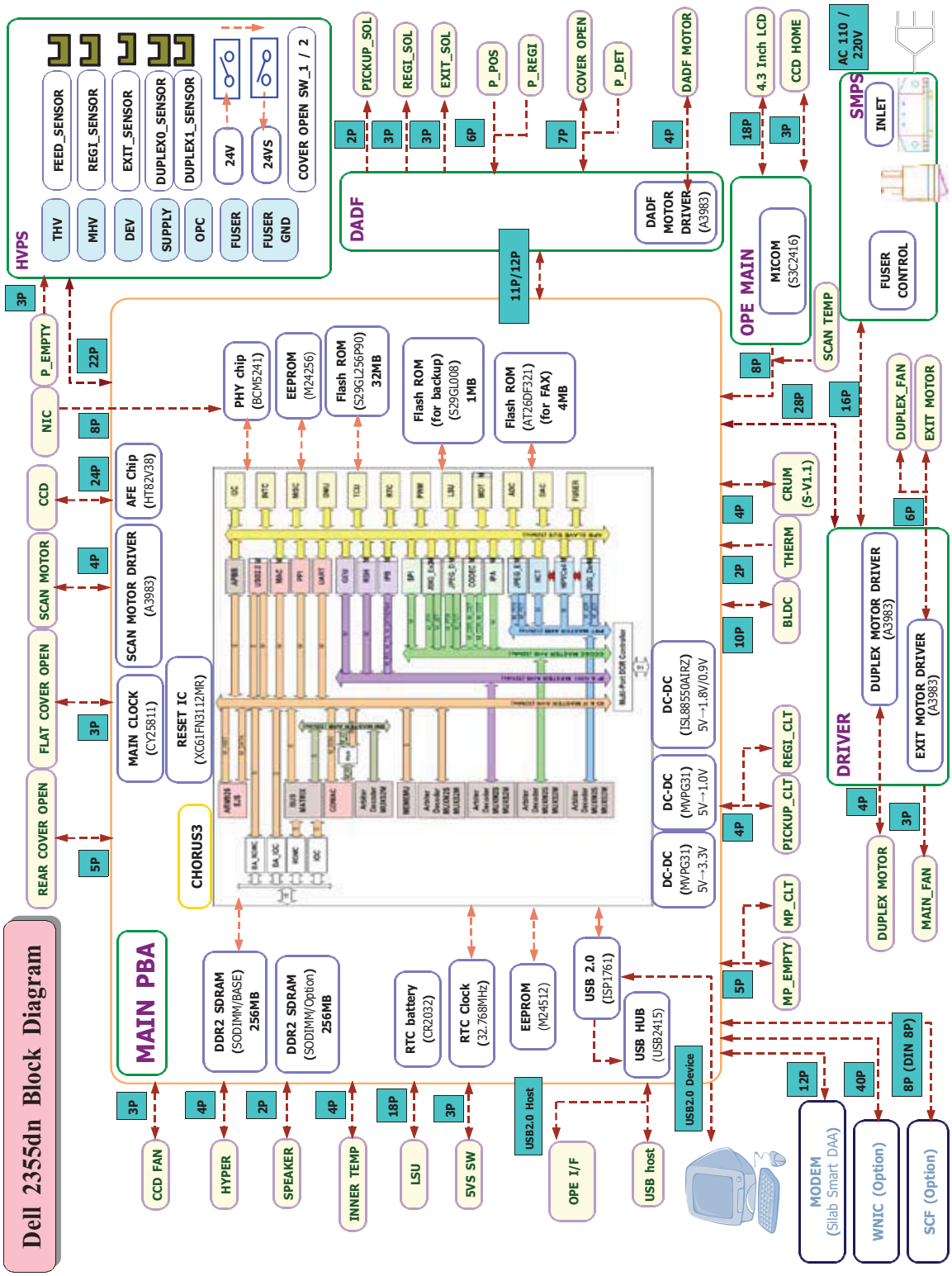

5.2 Connection Diagram

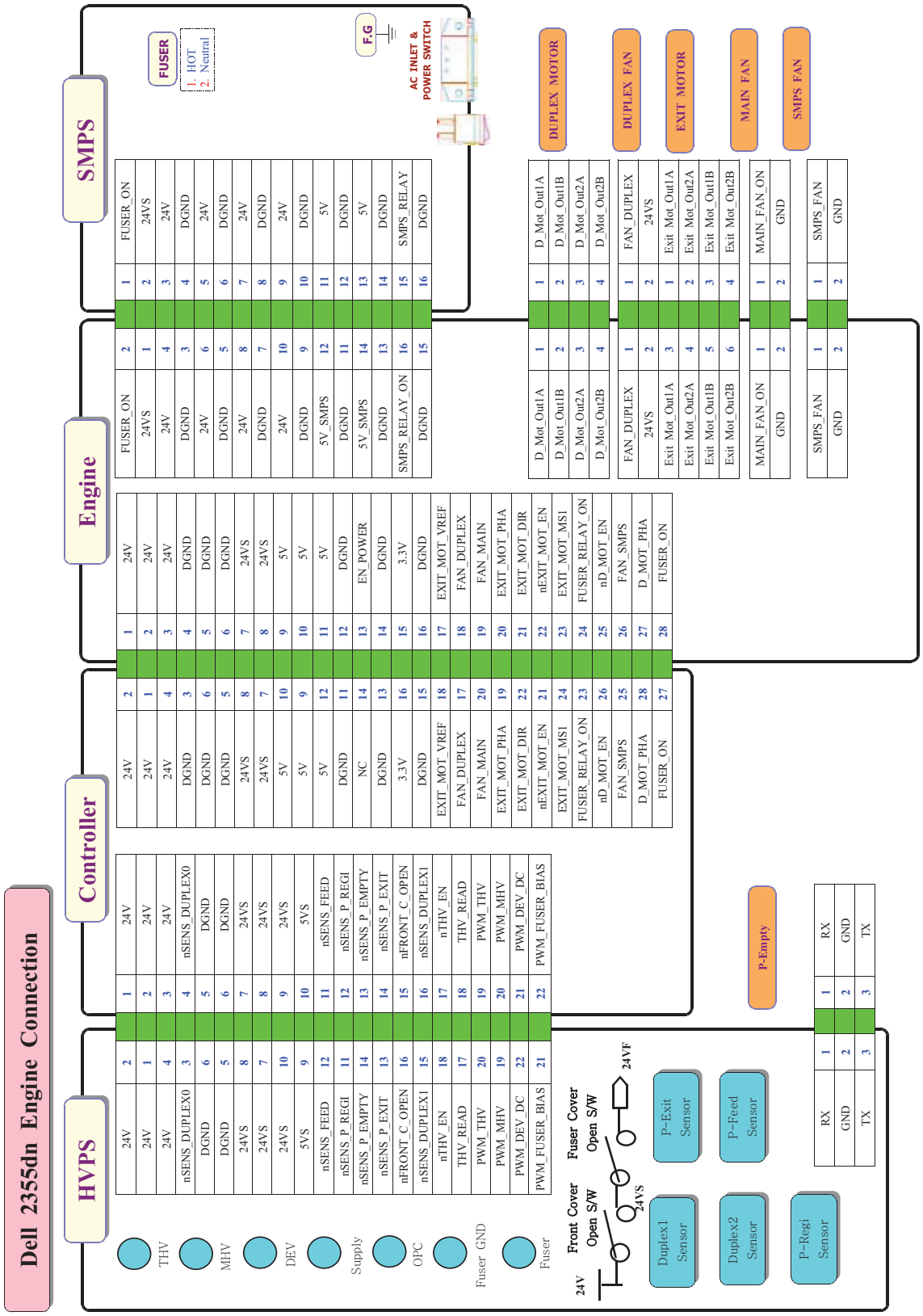

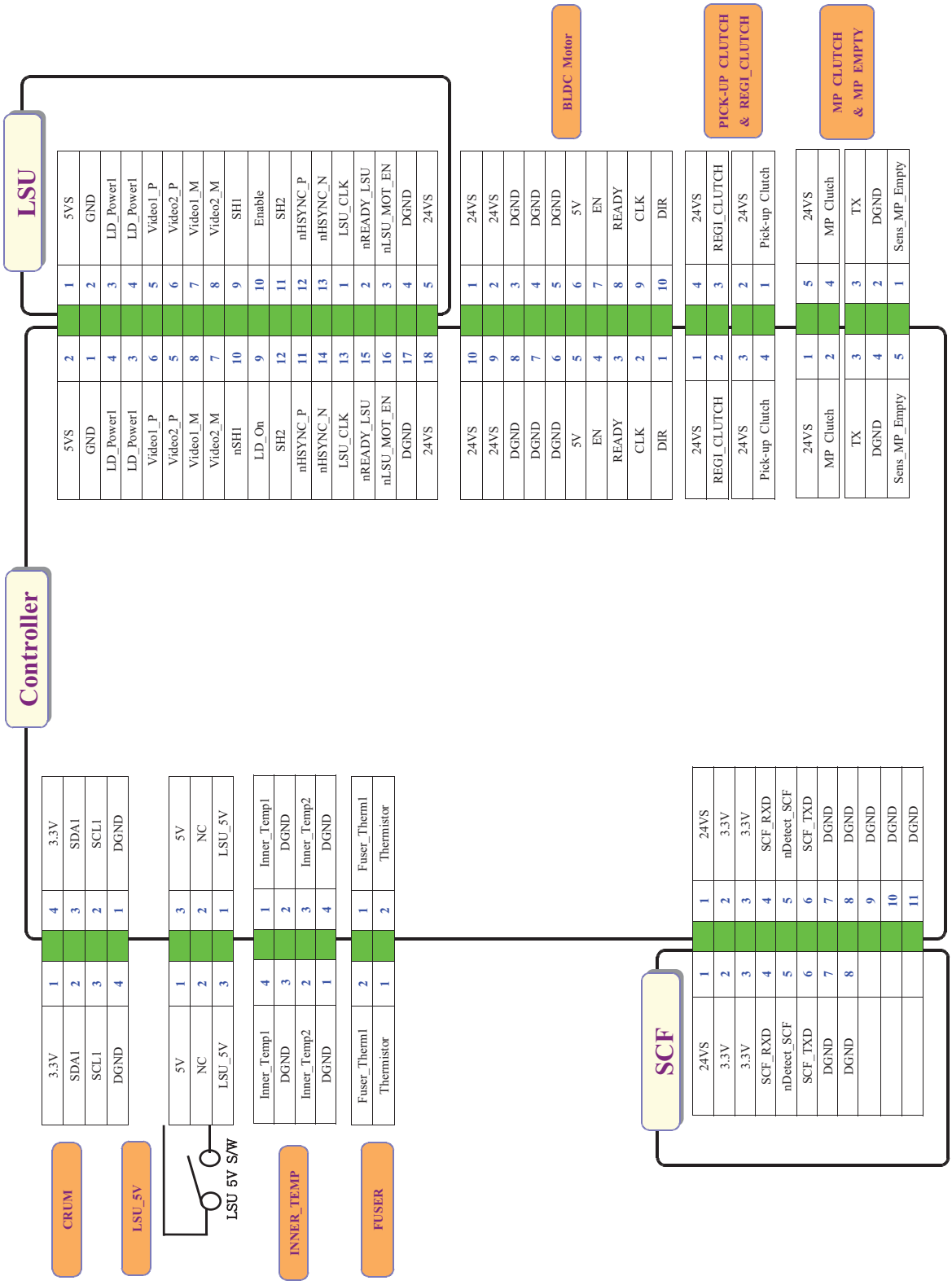
LSU
Controller
SCF
CRUM
LSU_5V
INNER_TEMP
FUSER
BLDC Motor
PICK-UP CLUTCH & REG1_CLUTCH
MP CLUTCH & MP EMPTY
LSU 5V S/W
5VS
GND
LD_Power1
LD_Power1
Video1_P
Video2_P
Video1_M
Video2_M
nSH1
LD_On
SH2
nHSYNC_P
nHSYNC_N
LSU_CLK
nREADY_LSU
nLSU_MOT_EN
DGND
24VS
24VS
24VS
DGND
DGND
DGND
5V
EN
READY
CLK
DIR
24VS
REG1_CLUTCH
24VS
Pick-up Clutch
24VS
MP Clutch
TX
DGND
Sens_MP_Empty
3.3V
SDA1
SCL1
DGND
5V
NC
LSU_5V
Inner_Temp1
DGND
Inner_Temp2
DGND
Fuser_Therm1
Thermistor
24VS
3.3V
3.3V
SCF_RXD
nDetect_SCF
SCF_TXD
DGND
DGND
DGND
DGND
DGND

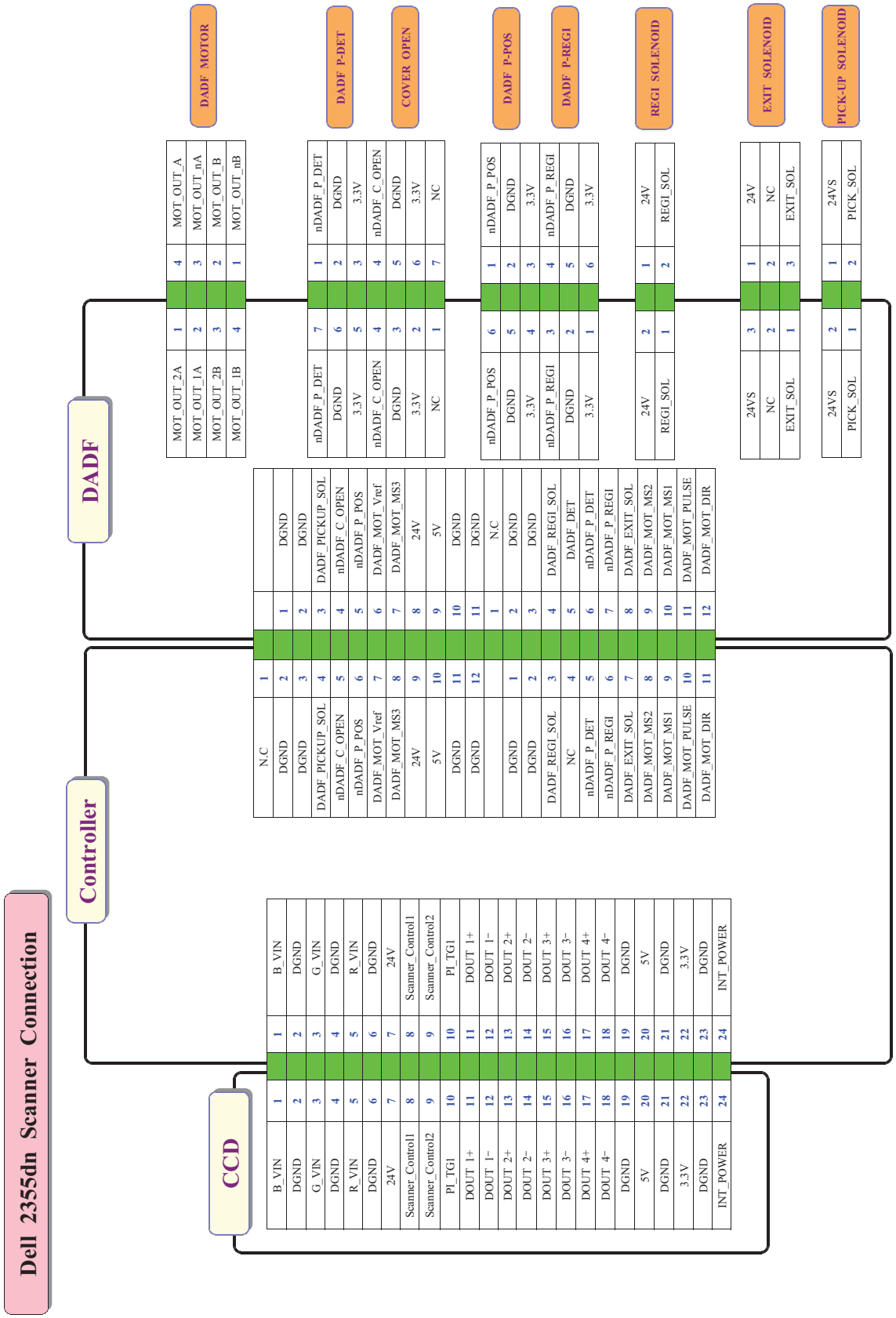
Dell 2355dn Scanner Connection
CCD
Controller
DADF
DADF MOTOR
DADF P-DET
COVER OPEN
DADF P-POS
DADF P-REGI
REGI SOLENOID
EXIT SOLENOID
PICK-UP SOLENOID
B_VIN
DGND
G_VIN
DGND
R_VIN
DGND
24V
Scanner_Control1
Scanner_Control2
PI_TG1
DOUT 1+
DOUT 1−
DOUT 2+
DOUT 2−
DOUT 3+
DOUT 3−
DOUT 4+
DOUT 4−
DGND
5V
DGND
3.3V
DGND
INT_POWER
N.C
DGND
DADF_PICKUP_SOL
nDADF_C_OPEN
nDADF_P_POS
DADF_MOT_Vref
DADF_MOT_MS3
24V
5V
DGND
DGND
N.C
DGND
DGND
DADF_REGI_SOL
DADF_DET
nDADF_P_DET
nDADF_P_REGI
DADF_EXIT_SOL
DADF_MOT_MS2
DADF_MOT_MS1
DADF_MOT_PULSE
DADF_MOT_DIR
MOT_OUT_2A
MOT_OUT_1A
MOT_OUT_2B
MOT_OUT_1B
MOT_OUT_A
MOT_OUT_nA
MOT_OUT_B
MOT_OUT_nB
nDADF_P_DET
DGND
3.3V
nDADF_C_OPEN
DGND
3.3V
NC
nDADF_P_POS
DGND
3.3V
nDADF_P_REGI
DGND
3.3V
24V
REGI_SOL
24VS
NC
EXIT_SOL
24VS
PICK_SOL

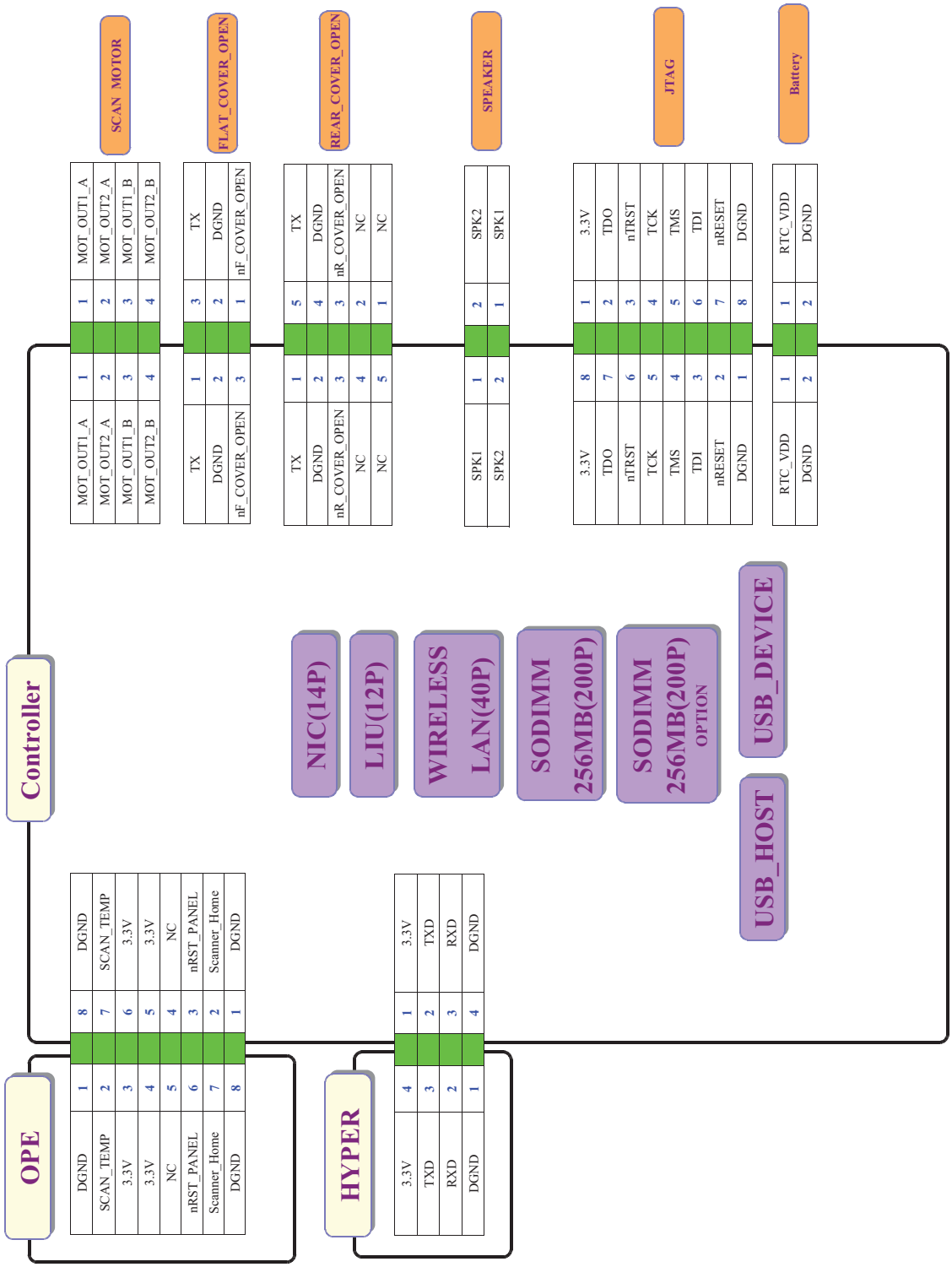
Controller
OPE
HYPER
SCAN_MOTOR
FLAT_COVER_OPEN
REAR_COVER_OPEN
SPEAKER
JTAG
Battery
NIC(14P)
LIU(12P)
WIRELESS LAN(40P)
SODIMM 256MB(200P)
SODIMM 256MB(200P) OPTION
USB_DEVICE
USB_HOST
MOT_OUT1_A
MOT_OUT2_A
MOT_OUT1_B
MOT_OUT2_B
TX
DGND
nF_COVER_OPEN
nR_COVER_OPEN
NC
SPK1
SPK2
3.3V
TDO
nTRST
TCK
TMS
TDI
nRESET
RTC_VDD
DGND
SCAN_TEMP
nRST_PANEL
Scanner_Home
TXD
RXD

6. Reference Information

This chapter contains the tools list, list of abbreviations used in this manual, and a guide to the location space required when installing the printer. A definition of test pages and Wireless Network information definition is also included.

6.1 Tool for Troubleshooting

The following tools are recommended safe and easy troubleshooting as described in this service manual.

- **DVM (Digital Volt Meter)**
  Standard : Indicates more than 3 digits.

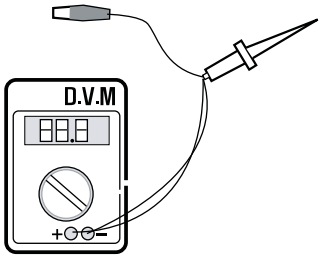

- **Driver**
  Standard : "-" type, "+" type (M3 long, M3 short, M2 long, M2 short).

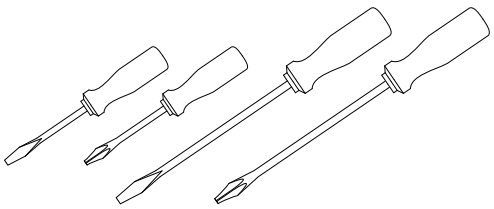

- **Tweezers**
  Standard : For general home use, small type.

- **Cotton Swab**
  Standard : For general home use, for medical service.

- **Cleaning Equipments**
  Standard : An IPA (Isopropyl Alcohol) dry wipe tissue or a gentle neutral detergent and lint-free cloth.

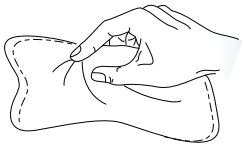

- **Vacuum Cleaner**

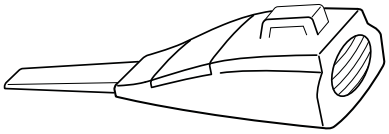

- **Spring Hook**
  Standard : For general use

- **Software (Driver) installation CD ROM**

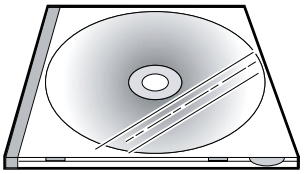

6.2 Acronyms and Abbreviations

The table below explains abbreviations used in this service manual.
The contents of this service manual are declared with abbreviations in many parts. Please refer to the table.

AC	Alternating Current
ADF	Automatic Document Feeder
ASIC	Application Specific Integrated Circuit
ASSY	Assembly
BIOS	Basic Input Output System
CCD	Charge Coupled Device
CIS	Contact Image Sensor
CMOS	Complementary Metal Oxide Semiconductor
CN	Connector
CON	Connector
CPU	Central Processing Unit
db	decibel
dbA	decibelampere
dbM	decibel milliwatt
DC	Direct Current
DCU	Diagnostic Control Unit
DPI	Dot Per Inch
DRAM	Dynamic Random Access Memory
DVM	Digital Voltmeter
ECP	Enhanced Capability Port
EEPROM	Electronically Erasable Programmable Read Only Memory
EMI	Electro Magnetic Interference
EP	Electrophotographic
EPP	Enhanced Parallel Port
F/W	Firmware
GDI	Graphics Device Interface
GND	Ground
HBP	Host Based Printing
HDD	Hard Disk Drive
HV	High Voltage
HVPS	High Voltage Power Supply
I/F	Interface
I/O	Input and Output
IC	Integrated Circuit
IDE	Intelligent Drive Electronics or Imbedded Drive Electronics
IEEE	Institute of Electrical and Electronics Engineers. Inc
IPA	Isopropy Alcohol
IPM	Images Per Minutes
LAN	Local Area Network
lb	pound(s)
LBP	Laser Beam Printer
LCD	Liquid Crystal Display
LED	Light Emitting Diode
LSU	Laser Scanning Unit
MB	Megabyte
MHz	Megahertz
NVRAM	Nonvolatile random access memory
OPC	Organic Photo Conductor
PBA	Printed Board Assembly
PCL	Printer Command Language, Printer Control Language
PDL	Page Discription Language
PPM	Page Per Minute
PTL	Pre-Transfer Lamp
Q'ty	Quantity
RAM	Random Access Memory
ROM	Read Only Memory
SCF	Second Cassette Feeder
SMPS	Switching Mode Power Supply
SPGP	SEC Printer Graphic Processor
SPL	SEC Printer Language
Spool	Simultaneous Peripheral Operation Online
SW	Switch
Sync	Synchronous or synchronization
USB	Universal Serial Bus

6.3 A4 ISO 19752 Standard Pattern

The sample pattern shown in below is the standard pattern used in the factory.
The life of the toner cartridge and the printing speed are measured using the pattern shown below.
(The image is 70% of the actual A4 size).

6.3.1 A4 ISO 19752 Standard Pattern

This test page is reproduced at 70% of the normal A4 size

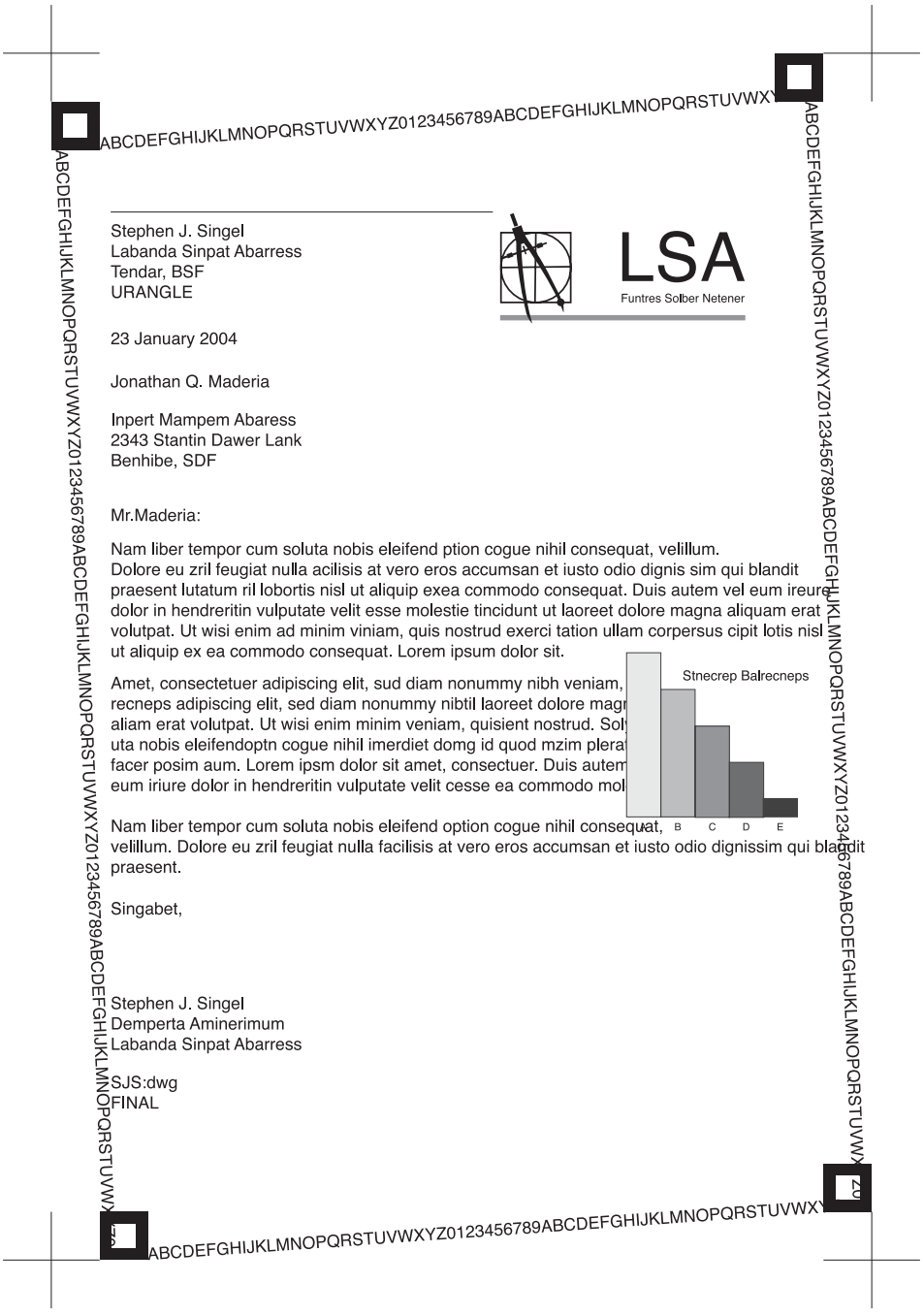

ExplodedView and Parts List

Contents

1. MAIN 7
2. COVER 9
2.1 COVER-MIDDLE 11
2.2 MEA-COVER_FRONT 13
2.3 MEA-COVER_REAR 15
3. ELA UNIT-MAIN DRIVE 17
4. DRIVE-DUPLEX 19
5. FRAME 21
5.1 FRAME MAIN 23
5.1.1 ELA HOU-FRAME EXIT 26
5.1.2 DRIVE-FUSER 28
5.1.3 ELA HOU-GUIDE_DUP F 30
5.1.4 ELA HOU-MPF 32
5.1.5 MEA_UNIT-BRACKET_FEED 34
5.1.6 MEA UNIT-CLUTCH 36
5.2 FUSER 38
6. MEA UNIT-DUPLEX 40
7. SCANNER 42
7.1 OPE 44
7.2 PLATEN 46
7.2.1 MEA-SCAN UPPER 48
7.2.2 PLATEN-LOWER 50
7.3 ELA HOU-DADF 52
7.3.1 ELA HOU-COVER PLATEN 54
7.3.2 ELA HOU-DADF DRV 56
7.3.3 ELA HOU-DADF LOWER 58
7.3.4 ELA HOU-DADF_UPPER 60
7.3.5 MEA UNIT-HINGE DADF 62
7.3.6 MEA UNIT-COVER OPEN 64
7.3.7 MEA UNIT-STACKER TX 66
8. CASSETTE 68
9. ELA HOU-SCF 70

Thumbnail 1

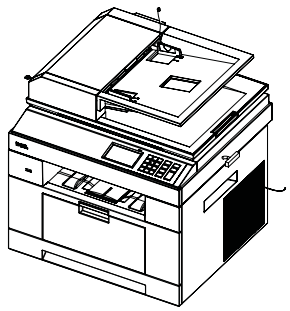	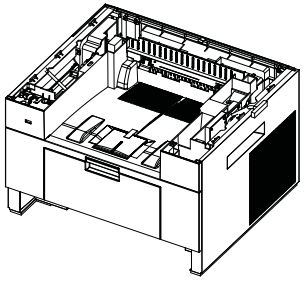	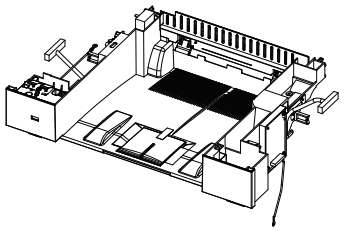	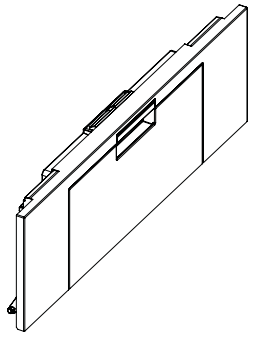	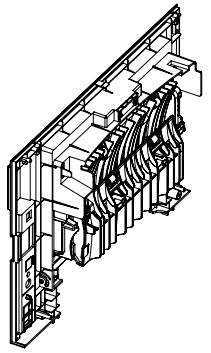
1. MAIN	2. COVER	2.1 COVER-MIDDLE	2.2 MEA-COVER_FRONT	2.3 MEA-COVER_REAR
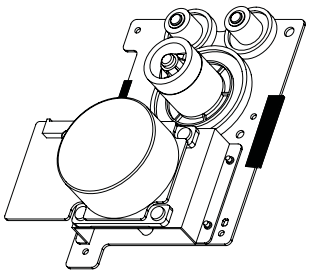	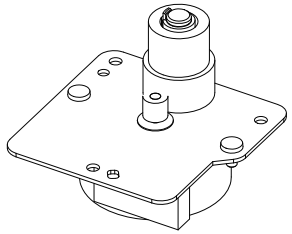	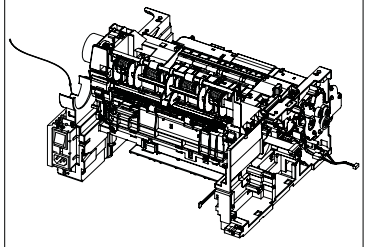	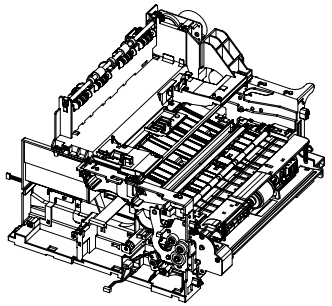	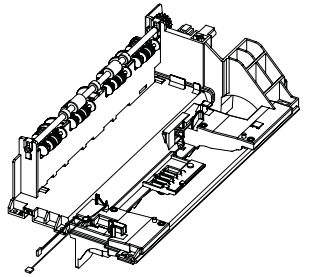
3. ELA UNIT-MAIN DRIVE	4. ELA UNIT-DUPLEX DRIVE	5. FRAME	5.1 ELA HOU-FRAME_ETC	5.1.1 ELA HOU-FRAME EXIT
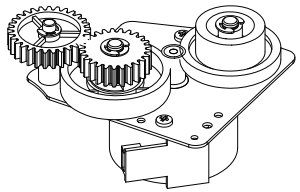	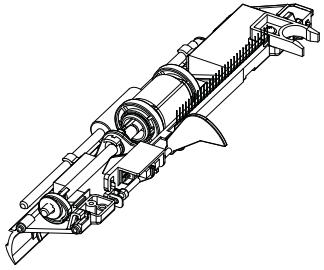	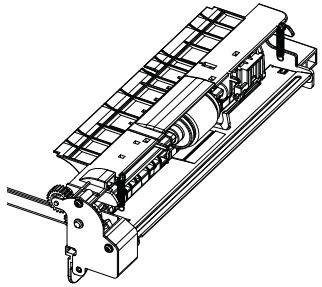	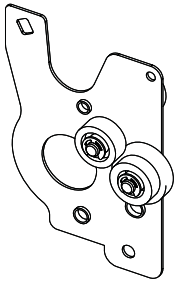	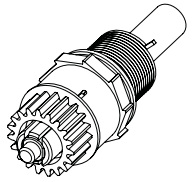
5.1.2 ELA HOU-FUSER DRIVE	5.1.3 ELA HOU-GUIDE_DUP F	5.1.4 ELA HOU-MPF	5.1.5 MEA_UNIT-BRACKET_FEED	5.1.6 MEA UNIT-CLUTCH

Thumbnail 2

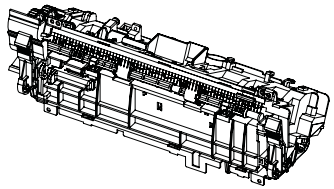	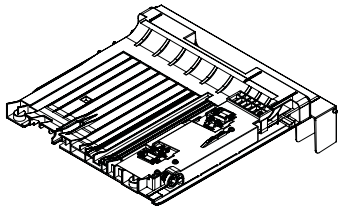	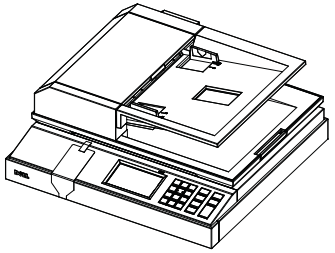	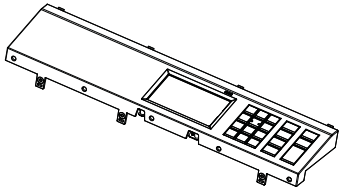	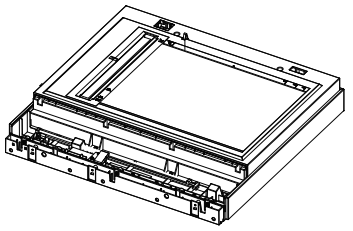
5.2 FUSER	6. MEA UNIT-DUPLEX	7. SCANNER	7.1 OPE	7.2 PLATEN
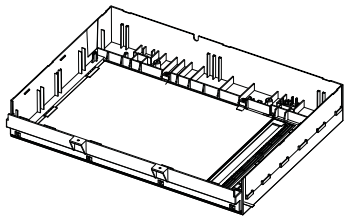	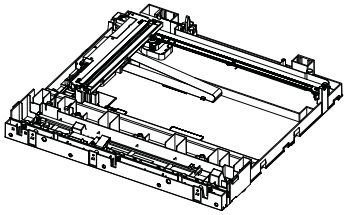	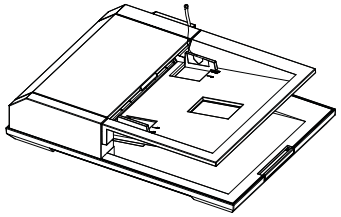	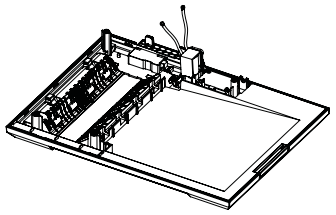	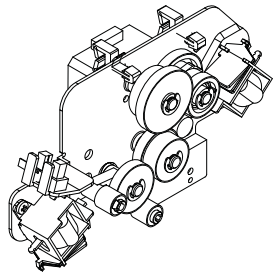
7.2.1 MEA-SCAN UPPER	7.2.2 PLATEN-LOWER	7.3 ELA HOU-DADF	7.3.1 ELA HOU-COVER PLATEN	7.3.2 ELA HOU-DADF DRV
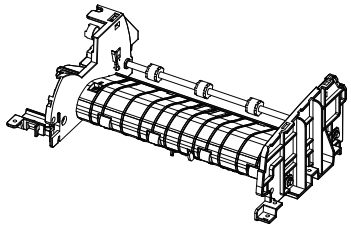	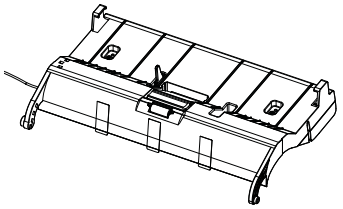	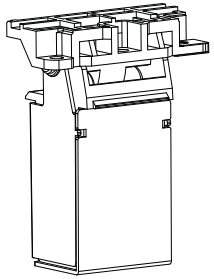	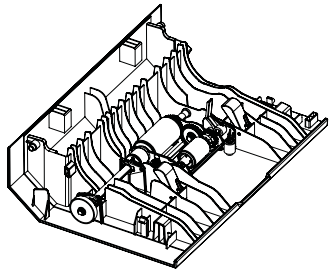	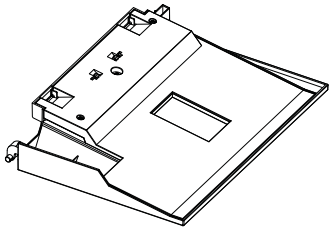
7.3.3 ELA HOU-DADF LOWER	7.3.4 ELA HOU-DADF_UPPER	7.3.5 MEA UNIT-HINGE DADF	7.3.6 MEA UNIT-COVER OPEN	7.3.7 MEA UNIT-STACKER TX

Thumbnail 3

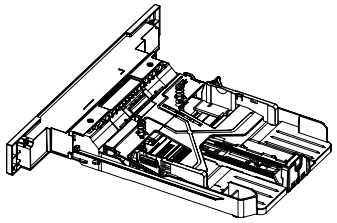	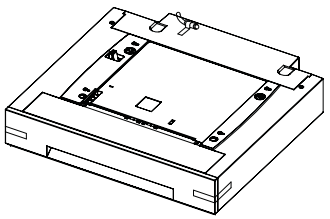
8. CASSETTE	9. ELA HOU-SCF

1. MAIN

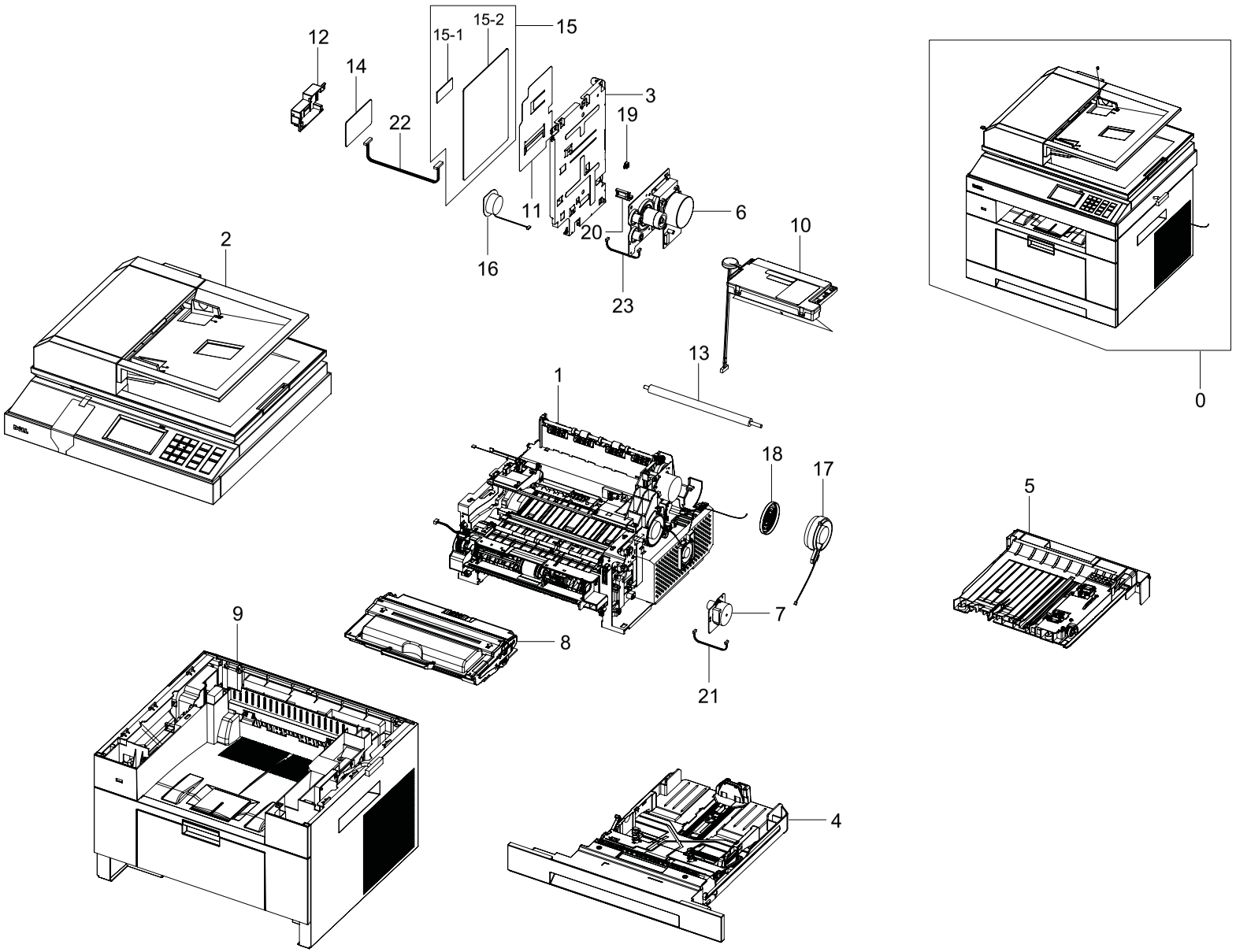

MAIN Parts List

SA : SERVICE AVAILABLE, SNA : SERVICE not AVAILABLE

Drawing#	Dell_ code	SEC_code	Description	Qty	Service	Remark
0			SET	1	SNA	
1		JC93-00313A	FRAME(110V)	1	SNA	
1		JC93-00313B	FRAME(220V)	1	SNA	
2		JC97-03865A	SCANNER(110V)	1	SNA	
2		JC97-03865B	SCANNER(220V)	1	SNA	
3		JC63-01839A	SHIELD-CONTROLLER	1	SNA	
4	JM043	JC97-03277A	MEA UNIT-CASSETTE	1	SA	
5		JC93-00314A	DRIVE-DUPLEX	1	SA	
6	YU933	JC96-03761B	ELA UNIT-MAIN DRIVE	1	SA	
7	KW466	JC96-03762B	ELA UNIT-DUPLEX DRIVE	1	SA	
8	CR963	JC96-04964A	CARTRIDGE-TONER	1	SA	3K
9		JC95-01271A	COVER	1	SNA	
10	YF792	JC59-00027A	UNIT-LSU	1	SA	
11		JC63-02010A	SHEET-MAIN PBA	1	SNA	

Drawing#	Dell_ code	SEC_code	Description	Qty	Service	Remark
12		JC63-01677A	COVER-FAX	1	SNA	
13	WJ045	JC66-01181A	ROLLER-TRANSFER	1	SA	
14		JC92-02060E	PBA-FAX CARD S	1	SA	
15		JC98-01357A	BOARD-MAIN	1	SA	
15-1		JC92-01975A	PBA-RAM DIMM	1	SA	
15-2		JC92-02336A	PBA-MAIN	1	SA	
16		3001-002262	SPEAKER	1	SNA	
17	KW432	JC31-00087A	FAN-DC	1	SA	
18		JC63-01778A	COVER-FAN_DC	1	SNA	
19		JC96-03155A	ELA HOU-DUMMY JACK	1	SNA	
20		6502-001093	CABLE CLAMP	1	SNA	
21		JC39-01003A	HARNESS-DUPLEX_MOTOR	1	SNA	
22		JC39-00883A	HARNESS-FAX	1	SNA	
23		JC39-00869A	HARNESS-BLDC	1	SNA	

2. COVER

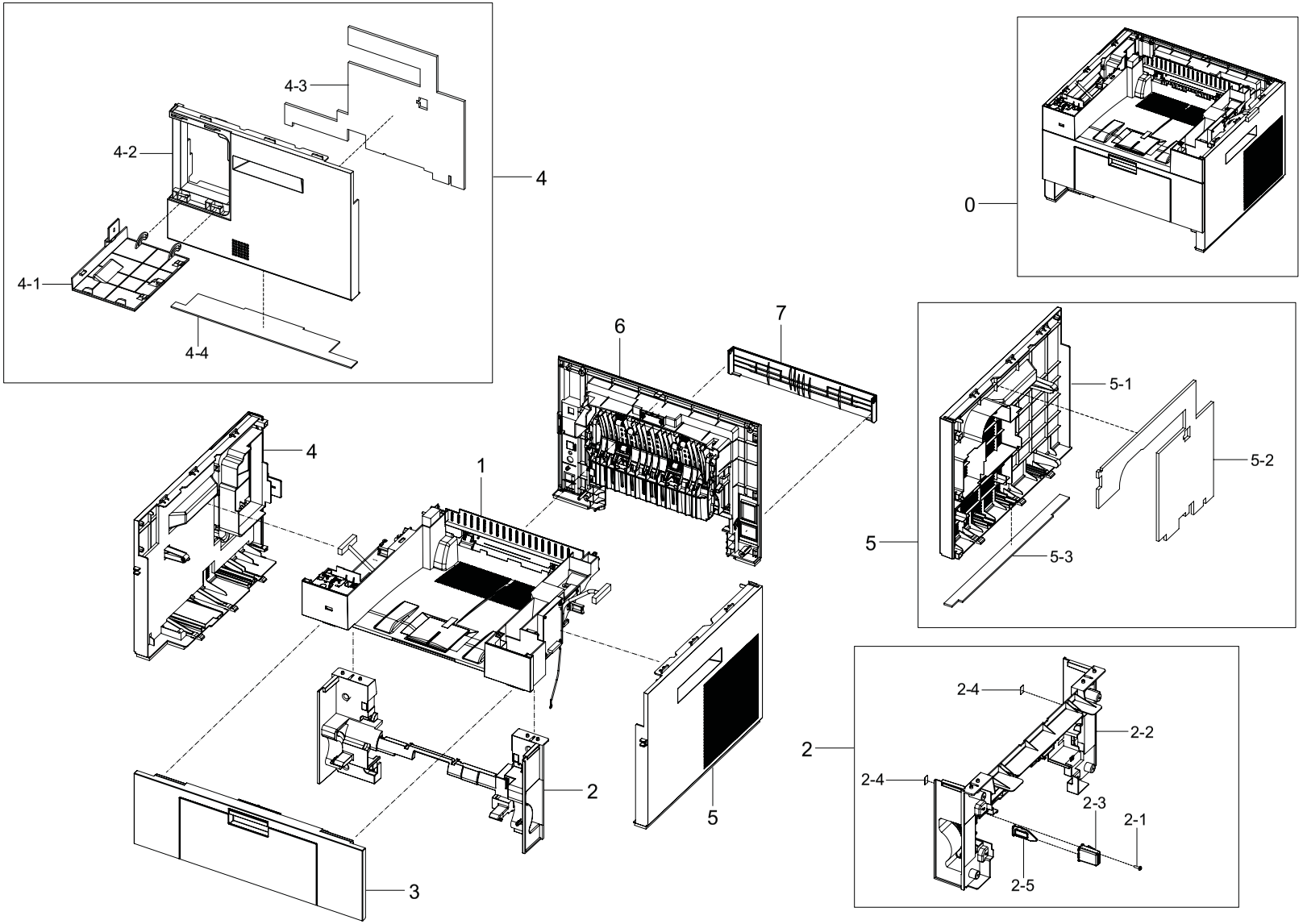

COVER Parts List

SA : SERVICE AVAILABLE, SNA : SERVICE not AVAILABLE

Drawing#	Dell_ code	SEC_code	Description	Qty	Service	Remark
0		JC95-01271A	COVER	1	SNA	
1		JC95-01272A	COVER-MIDDLE	1	SNA	
2		JC95-01273A	COVER-MIDDLE FRONT	1	SNA	
2-1		6003-000196	SCREW-TAPTITE	1	SNA	
2-2		JC63-02806A	COVER-MID FRONT	1	SNA	
2-3		JC67-00068B	CAP-M_SUB ACTUATOR	1	SNA	
2-4		JC68-01372B	LABEL-FUNCTION	2	SNA	
2-5		JC72-01339A	PMO-M-SUB ACTUATOR	1	SNA	
3		JC97-03272A	MEA-COVER FRONT	1	SA	
4		JC97-03275A	MEA-COVER SIDE L	1	SA	

Drawing#	Dell_ code	SEC_code	Description	Qty	Service	Remark
4-1	KW448	JC63-01810A	COVER-DIMM	1	SA	
4-2		JC63-01832A	COVER-SIDE L	1	SNA	
4-3		JC72-01466A	SPONGE-SIDE L1	1	SNA	
4-4		JC72-01467A	SPONGE-SIDE L2	1	SNA	
5		JC97-03274A	MEA-COVER SIDE R	1	SA	
5-1		JC63-01833A	COVER-SIDE R	1	SNA	
5-2		JC72-01464A	SPONGE-SIDE R1	1	SNA	
5-3		JC72-01465A	SPONGE-SIDE R2	1	SNA	
6		JC97-03276A	MEA-COVER REAR	1	SA	
7		JC63-01464B	COVER-FRAME DUP	1	SNA	

2.1 COVER-MIDDLE

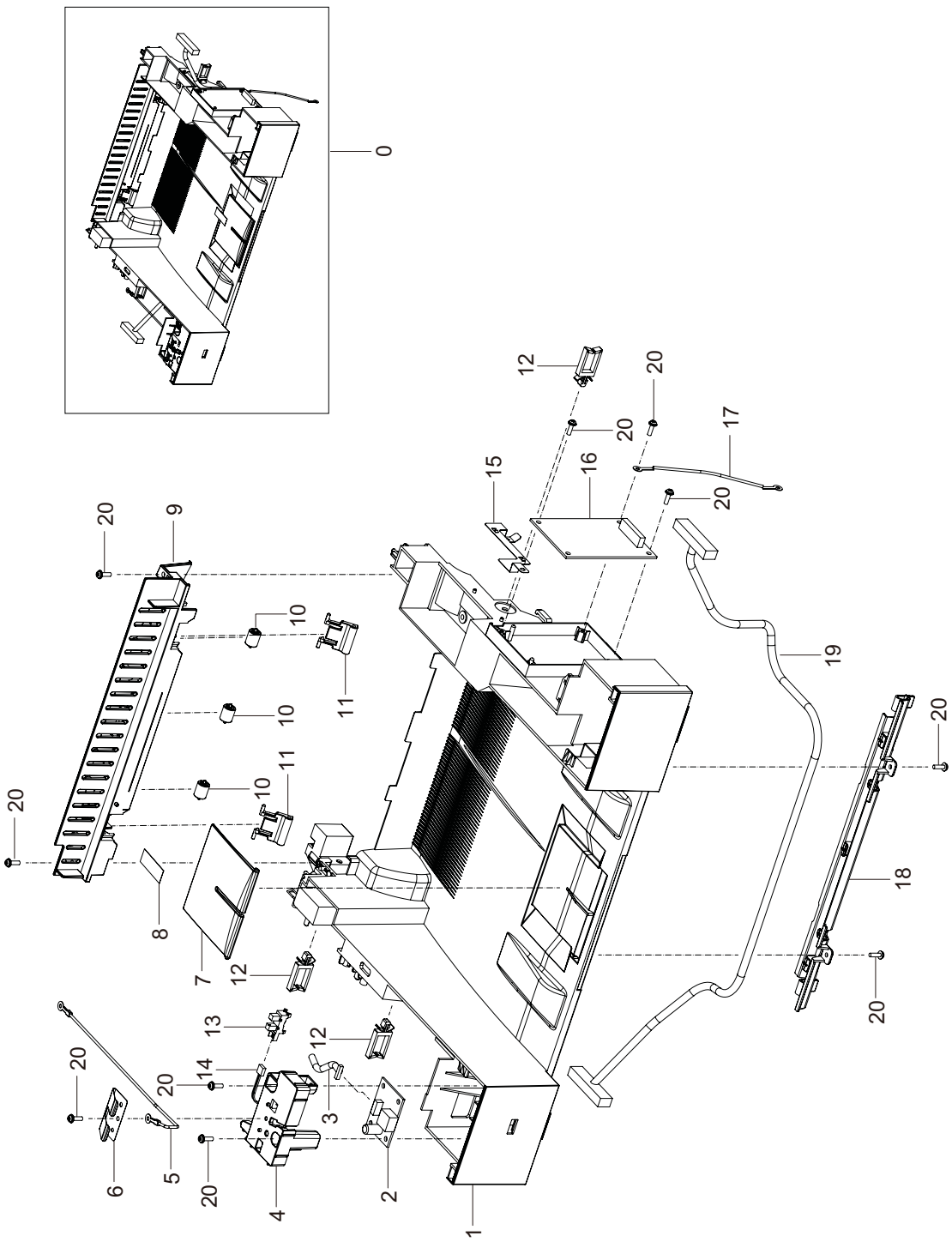

COVER-MIDDLE Parts List

SA : SERVICE AVAILABLE, SNA : SERVICE not AVAILABLE

Drawing#	Dell_ code	SEC_code	Description	Qty	Service	Remark
0		JC95-01272A	COVER-MIDDLE	1	SNA	
1		JC63-01817A	COVER-MIDDLE	1	SNA	
2		JC92-02080A	PBA-USB HOST	1	SA	
3		JC39-01038A	HARNESS-USB HOST	1	SNA	
4		JC61-04009A	HOLDER-GROUND	1	SNA	
5		JC39-00114A	CBF HARNESS-BRUSH GND	1	SNA	
6		JC63-00791A	GROUND-P-SPRING SCAN	1	SNA	
7		JC63-01834A	COVER-STACKER RX	1	SNA	
8		0203-001159	TAPE-FILAMENT	0.1	SNA	
9		JC63-00938B	COVER-M_REAR UPPER	1	SNA	
10		JC72-40981A	PMO-ROLLER UPPER DP	3	SA	

Drawing#	Dell_ code	SEC_code	Description	Qty	Service	Remark
11		JC72-01001A	PMO-SUB STACKER	2	SA	
12		6502-001093	CABLE CLAMP	3	SA	
13		0604-001095	PHOTO-INTERRUPTER	1	SA	
14		JC39-01010A	HARNESS-R_COVER_OPEN	1	SNA	
15		JC63-02004A	GROUND-MIDDLE	1	SNA	
16		JC92-02191A	PBA-DRIVER	1	SA	
17		JC39-00509A	CBF HARNESS-GND ZENER	1	SA	
18		JC61-04010A	HOLDER-HARNESS	1	SNA	
19		JC39-00863A	HARNESS-ENGINE	1	SA	
20		6003-000196	SCREW-TAPTYPE	10	SA	

2.2 MEA-COVER_FRONT

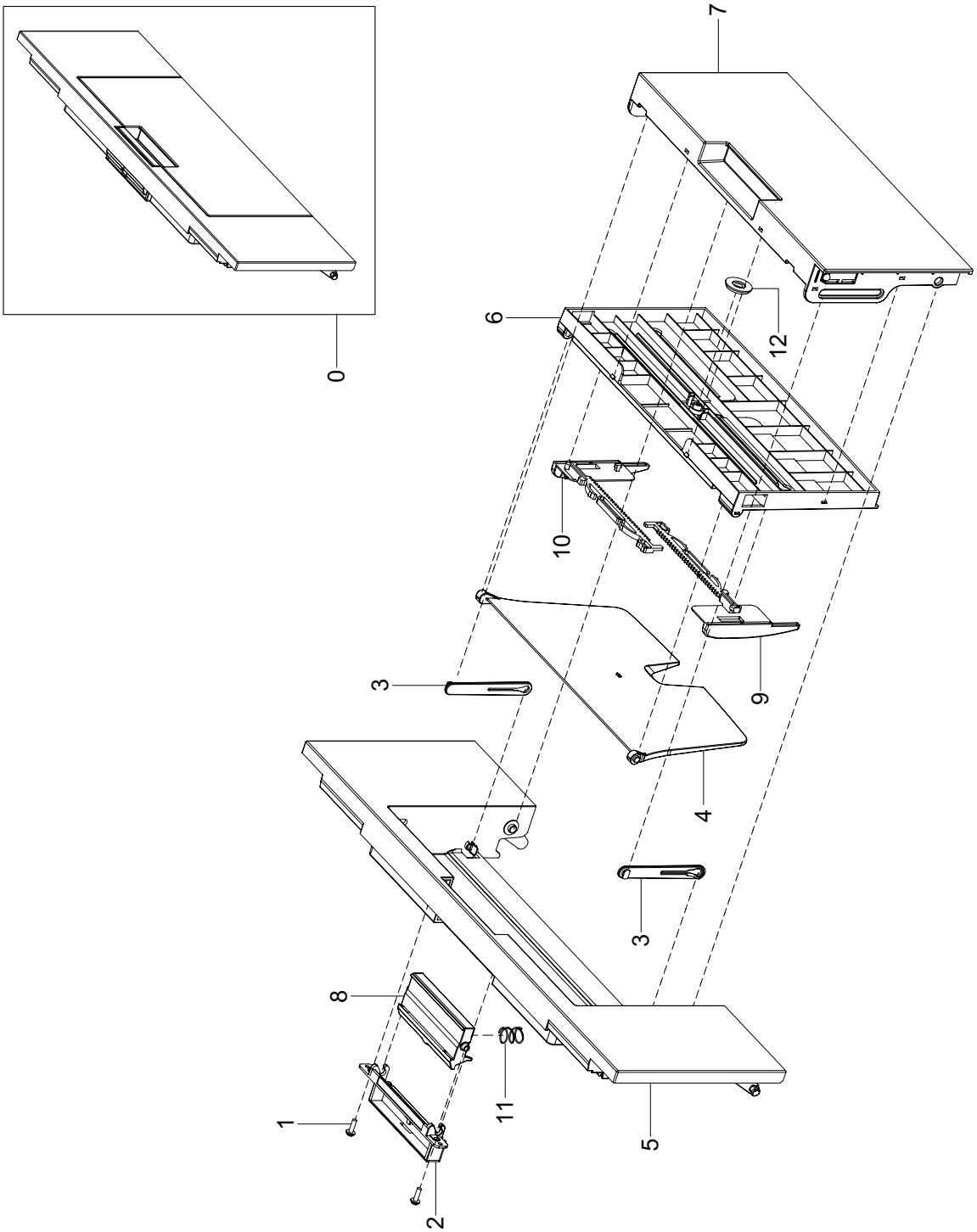

MEA-COVER_FRONT Parts List

SA : SERVICE AVAILABLE, SNA : SERVICE not AVAILABLE

Drawing#	Dell_ code	SEC_code	Description	Qty	Service	Remark
0		JC97-03272A	MEA-COVER FRONT	1	SA	
1		6003-000196	SCREW-TAPTITE	2	SNA	
2		JC61-02537A	HOLDER-LOCKER	1	SNA	
3		JC63-00444A	TRAY-M-LINK_MP	2	SNA	
4		JC63-00447D	TRAY-ASF_FOLDER	1	SNA	
5		JC63-01812A	COVER-FRONT	1	SNA	
6		JC63-01838A	COVER-TRAY MP	1	SNA	

Drawing#	Dell_ code	SEC_code	Description	Qty	Service	Remark
7		JC63-01840A	TRAY-ASF INPUT	1	SNA	
8		JC64-00398A	LOCKER-FRONT COVER	1	SNA	
9		JC70-00478C	ADJUST-M_MP L	1	SNA	
10		JC70-00479C	ADJUST-M_MP R	1	SNA	
11		JG61-70549A	SPRING ETC-CIS(C2)	1	SNA	
12		JG66-40003A	GEAR-PINION	1	SNA	

2.3 MEA-COVER_REAR

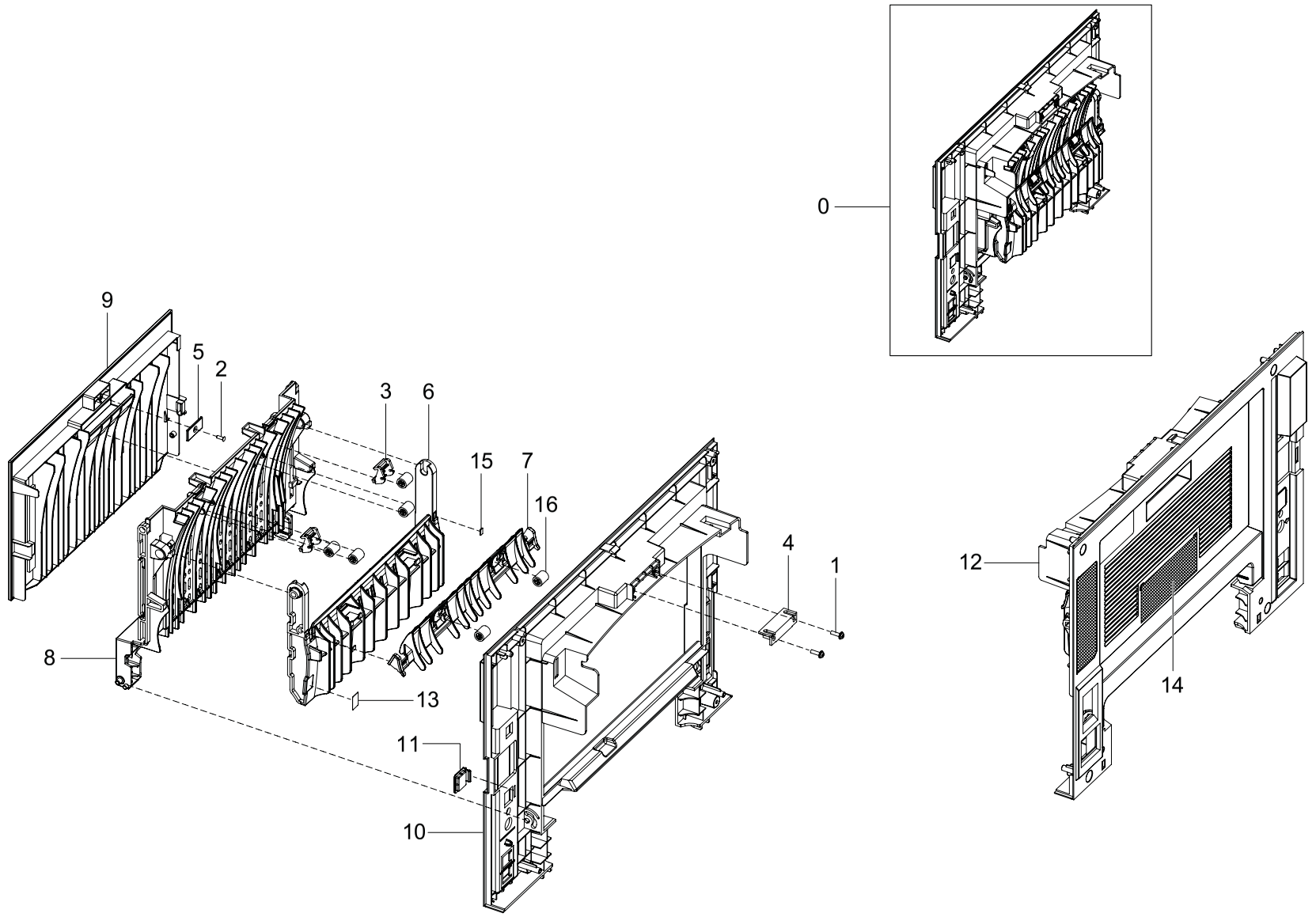

MEA-COVER_REAR Parts List

SA : SERVICE AVAILABLE, SNA : SERVICE not AVAILABLE

Drawing#	Dell_ code	SEC_code	Description	Qty	Service	Remark
0		JC97-03276A	MEA-COVER REAR	1	SA	
1		6003-000196	SCREW-TAPTITE	3	SNA	
2		6003-001001	SCREW-TAPTITE	1	SNA	
3		JC61-00785A	HOLDER-M-IDLE ROLLER	1	SNA	
4		JC61-00961A	MAGNET-CATCH DELL	1	SNA	
5		JC61-00962A	PLATE-MAGNET CATCH	2	SNA	
6		JC61-01583A	GUIDE-OUTPUT FUSER	1	SNA	
7		JC61-01944A	GUIDE-OUTPUT F UPPER	1	SNA	
8		JC63-00937B	COVER-M-STACKER REAR	1	SNA	

Drawing#	Dell_ code	SEC_code	Description	Qty	Service	Remark
9		JC63-01811A	COVER-FACE UP	1	SNA	
10		JC63-01823A	COVER-REAR	1	SNA	
11		JC67-00160A	CAP-NETWORK	1	SNA	
12		JC68-01668D	LABEL-INFORMATION	1	SNA	
13		JC68-01669B	LABEL(R)-FUSER	1	SNA	
14		JC68-02149A	LABEL-INFORMATION	6	SNA	
15		JC72-01403A	SPONGE-GUIDE OUTPUT	2	SNA	
16		JC72-40981A	PMO-ROLLER UPPER DP	1	SNA	

3. ELA UNIT-MAIN DRIVE

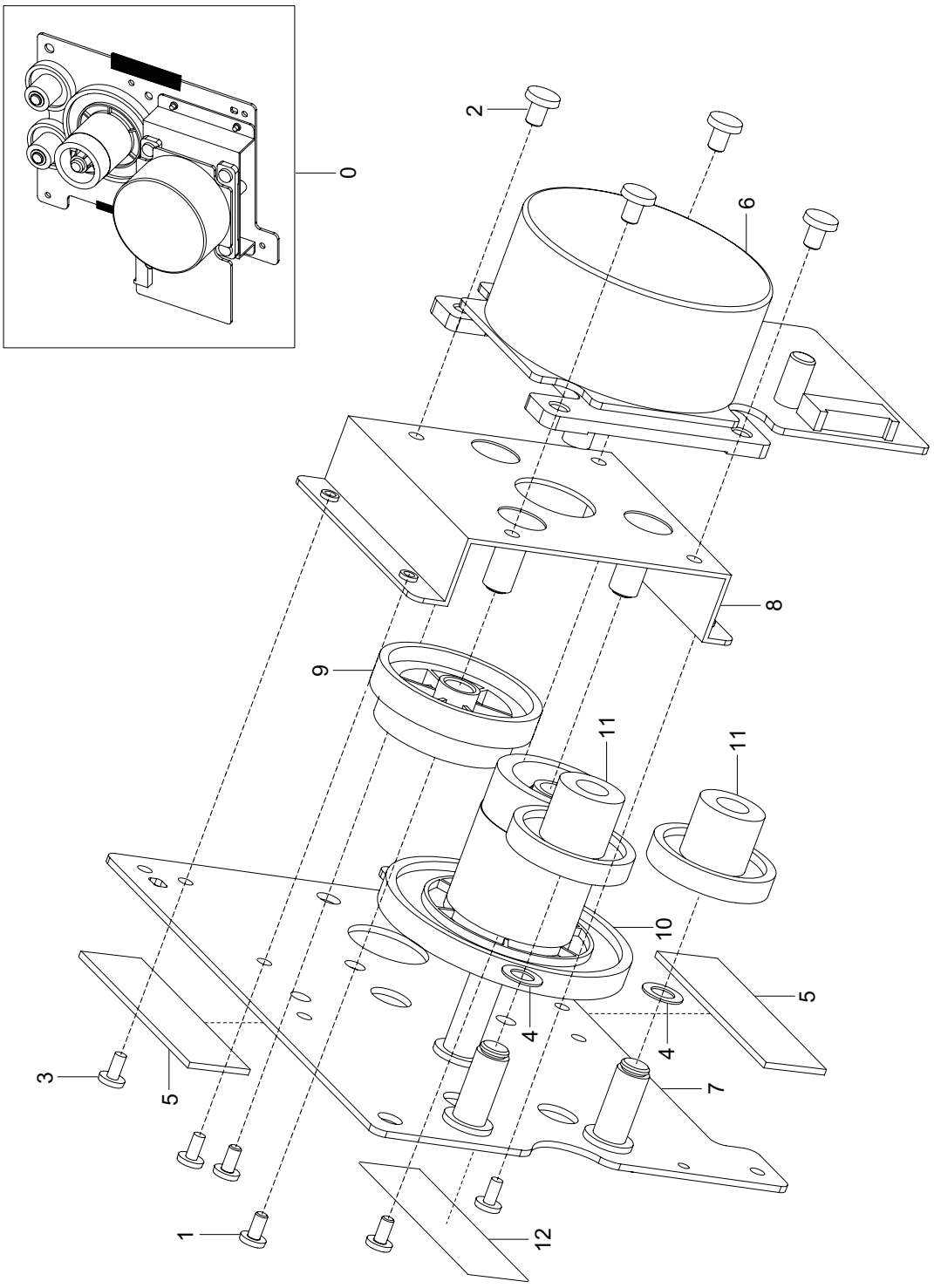

ELA UNIT-MAIN DRIVE Parts List

SA : SERVICE AVAILABLE, SNA : SERVICE not AVAILABLE

Drawing#	Dell_ code	SEC_code	Description	Qty	Service	Remark
0		JC96-03761B	ELA UNIT-MAIN DRIVE	1	SA	
1		6001-000130	SCREW-MACHINE	3	SNA	
2		6003-000301	SCREW-TAPTITE	4	SNA	
3		6003-000269	SCREW-TAPTITE	4	SNA	
4		6031-000023	WASHER-PLAIN	2	SNA	
5		6302-001056	GASKET	0.4	SNA	
6		JC31-00101A	MOTOR BLDC	1	SNA	
7		JC61-01593A	BRACKET-P-GEAR MAIN	1	SNA	
8		JC61-01597A	BRACKET-P-MOTOR MAIN	1	SNA	
9		JC66-01156A	GEAR-OPC RDCN 93/61	1	SNA	
10		JC66-01157A	GEAR-OPC DRV 113/33	1	SNA	
11		JC66-01162A	GEAR-FEED RDCN 55/18	2	SNA	
12		JC68-01381B	LABEL(R)-PPID(DEVE)	1	SNA	

4. DRIVE-DUPLEX

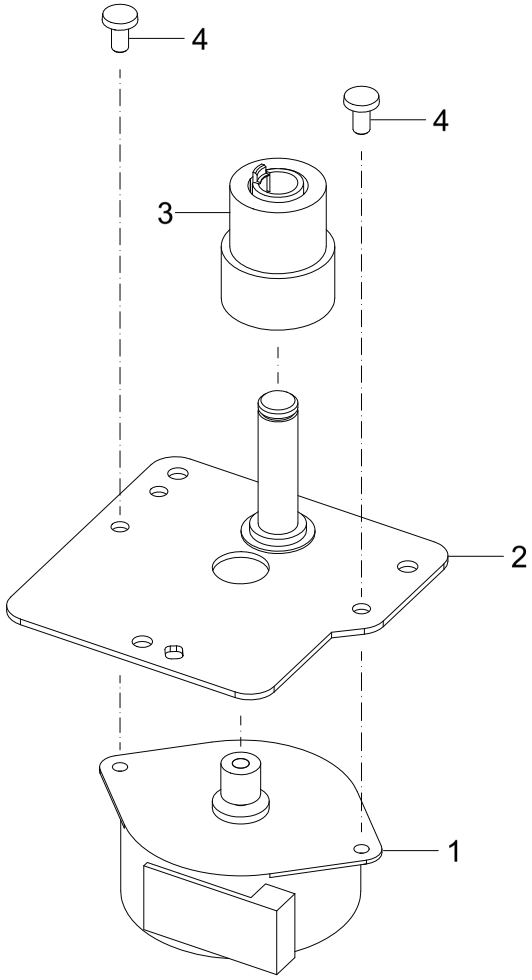

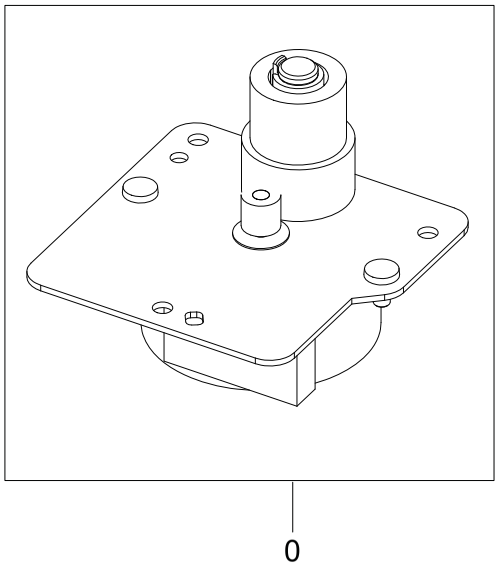

DRIVE-DUPLEX Parts List

SA : SERVICE AVAILABLE, SNA : SERVICE not AVAILABLE

Drawing#	Dell_ code	SEC_code	Description	Qty	Service	Remark
0		JC93-00314A	DRIVE-DUPLEX	1	SA	
1		JC93-00316A	DRIVE-MOTOR STEP	1	SNA	
2		JC61-01599A	BRACKET-P-GEAR DUP	1	SNA	
3		JC61-01159A	GEAR-DUP RDCN 45/19	1	SNA	
4		6001-000130	SCREW-MACHINE	1	SNA	

5. FRAME

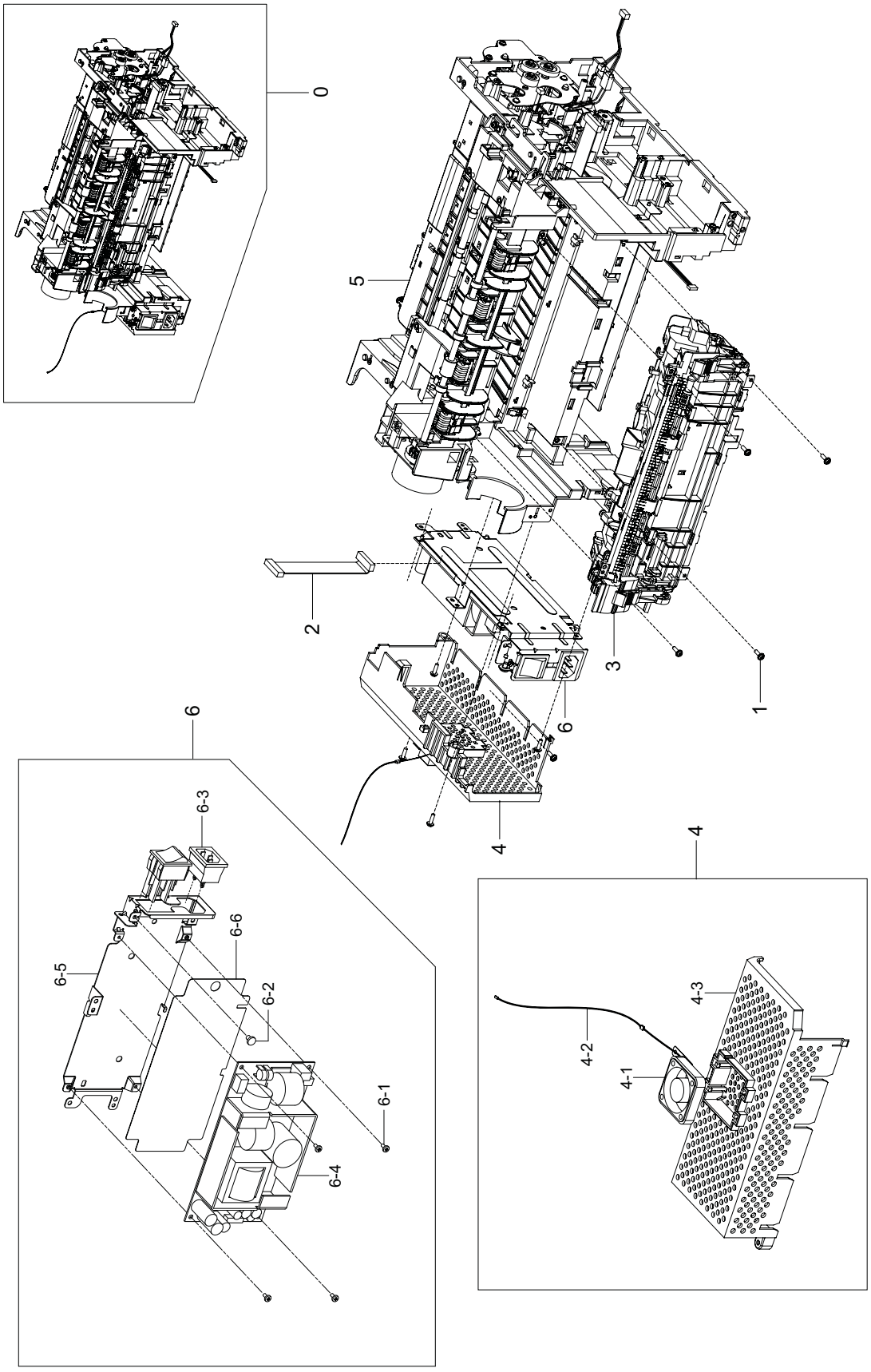

FRAME Parts List

SA : SERVICE AVAILABLE, SNA : SERVICE not AVAILABLE

Drawing#	Dell_ code	SEC_code	Description	Qty	Service	Remark
0		JC93-00313A	FRAME	1	SNA	110V
0		JC93-00313B	FRAME	1	SNA	220V
1		6003-000196	SCREW-TAPTITE	9	SNA	
2		JC44-00097B	HARNESS-SMPS	1	SNA	
3	KW450	JC96-05064B	FUSER	1	SA	220V
3	KW449	JC96-05063B	FUSER	1	SA	110V
4		JC96-05152A	ELA HOU-COVER SMPS	1	SNA	
4-1	KW433	JC31-00108A	FAN	1	SA	
4-2		JC39-00911A	HARNESS-SMPS_FAN	1	SNA	
4-3		JC63-01740A	COVER-SMPS	1	SNA	

Drawing#	Dell_ code	SEC_code	Description	Qty	Service	Remark
5		JC93-00312A	FRAME MAIN	1	SNA	
6		JC98-01673B	BOARD-SMPS	1	SNA	220V
6		JC98-01673A	BOARD-SMPS	1	SNA	110V
6-1		6003-000269	SCREW-TAPTITE	4	SNA	
6-2		6003-000301	SCREW-TAPTITE	1	SNA	
6-3		JC39-01501A	HARNESS AC-INLET	1	SNA	
6-4		JC44-00090F	SMPS-V2	1	SNA	220V
6-4		JC44-00097F	SMPS-V1	1	SNA	110V
6-5		JC63-00913A	SHIELD-P-SMPS	1	SNA	
6-6		JC63-00960A	SHEET-INSULATOR_SMPS	1	SNA	

5.1 FRAME MAIN

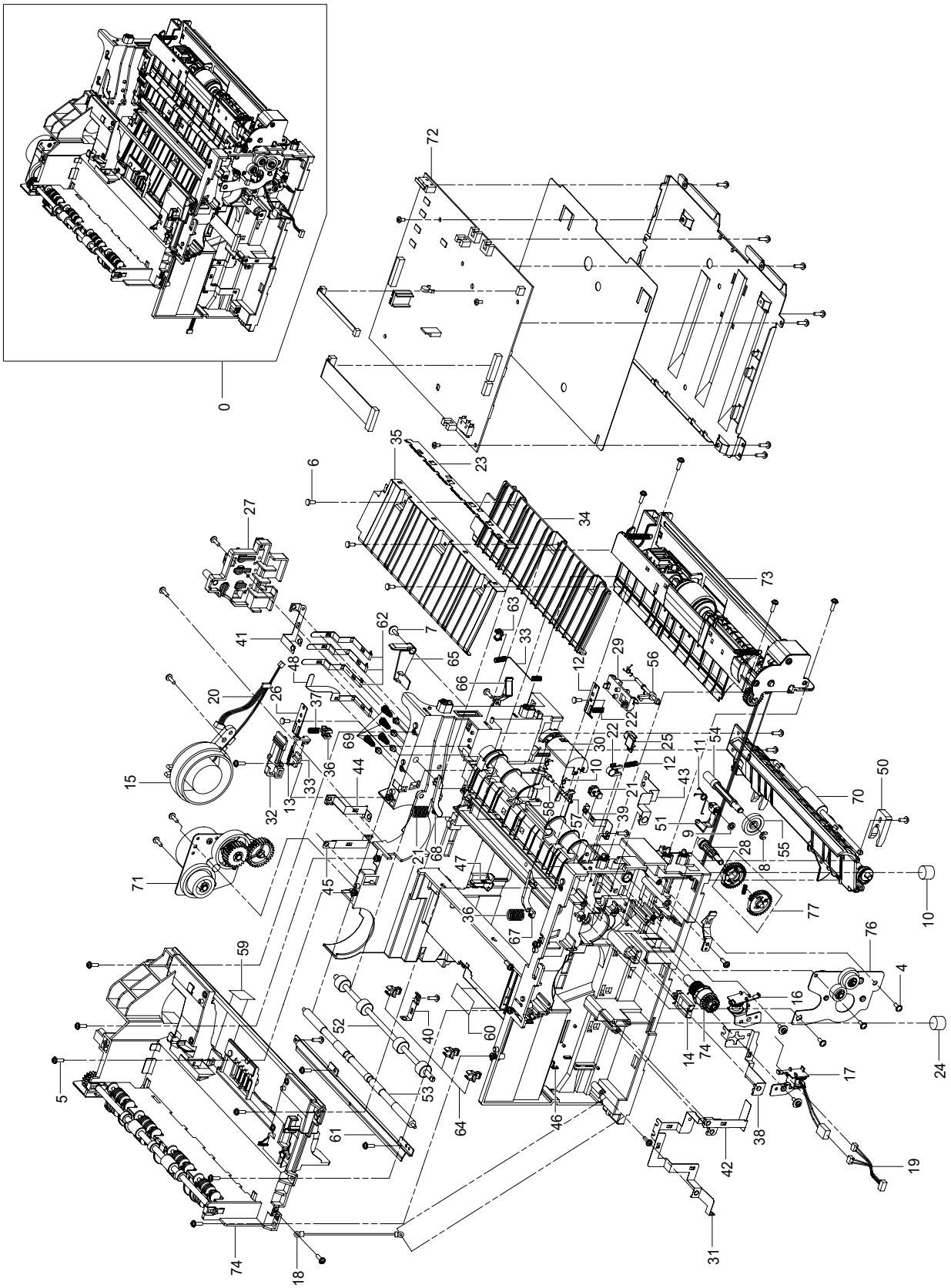

FRAME MAIN Parts List

SA : SERVICE AVAILABLE, SNA : SERVICE not AVAILABLE

Drawing#	Dell_ code	SEC_code	Description	Qty	Service	Remark
0		JC93-00312A	FRAME MAIN	1	SNA	
1		0201-001183	ADHESIVE-AA	0.025	SNA	
2		0205-001003	GREASE-BEARING	0.001	SNA	
3		0205-001067	GREASE-GRAPHITE	0.006	SNA	
4		6002-000440	SCREW-TAPPING	4	SNA	
5		6003-000196	SCREW-TAPTITE	34	SNA	
6		6003-000282	SCREW-TAPTITE	5	SNA	
7		6006-001078	SCREW-TAPTITE	3	SNA	
8		6044-000001	RING-CS	1	SNA	
9		6044-000125	RING-E	1	SNA	
10		6107-001164	SPRING-TS	3	SNA	
11		6107-001352	SPRING-TS	1	SNA	
12		6107-001370	SPRING-CS	1	SNA	
13		6107-001498	SPRING-ES	1	SNA	
14		6502-001093	CABLE CLAMP	1	SNA	
15	KW431	JC31-00107A	FAN	1	SA	
16		JC33-00025B	SOLENOID-MANUAL	1	SNA	
17		JC33-00027B	SOLENOID-FEED	1	SNA	
18		JC39-00322A	CBF HARNESS-SCAN GND	1	SNA	
19		JC39-00880A	HARNESS-SOLENOID	1	SNA	
20		JC39-01004A	HARNESS-EXIT_MOTOR	1	SNA	
21		JC61-00585A	BUSH-M-FEED IDLE	2	SNA	
22		JC61-00588A	BUSH-M-TR L	1	SNA	
23		JC61-00604B	PLATE-E_SAW	1	SNA	
24		JC61-00835A	FOOT-BACK	2	SNA	
25		JC61-00907A	HOLDER-M-PTL R2	1	SNA	
26		JC61-00914A	PLATE-P-PUSH BUSHING	2	SNA	
27		JC61-01584A	HOUSING-M_TERMINAL	1	SNA	
28		JC61-01602A	HOLDER-M_PICK UP	1	SNA	
29		JC61-01618A	HOLDER-M_ACT FEED	1	SNA	

Drawing#	Dell_ code	SEC_code	Description	Qty	Service	Remark
30		JC61-01619A	HOLDER-M_ACT REGI	1	SNA	
31		JC61-01620A	FRAME-M_BASE	1	SNA	
32		JC61-01622B	HOLDER-M_TR	1	SNA	
33		JC61-01623A	GUIDE-M_HOLDER TR	1	SNA	
34		JC61-01942A	GUIDE-TR RIB	1	SNA	
35		JC61-01943A	GUIDE-TR	1	SNA	
36		JC61-70932A	SPRING ETC-GUIDE DEVE	2	SNA	
37		JC61-70958A	SPRING ETC-TR	2	SNA	
38		JC63-00917A	GROUND-P-DRIVE	1	SNA	
39		JC63-00918A	GROUND-P-EARTH TR	1	SNA	
40		JC63-00920A	GROUND-P-FUSER	1	SNA	
41		JC63-00921A	GROUND-P-GUIDE TR	1	SNA	
42		JC63-00922A	GROUND-P-DRIVE2	1	SNA	
43		JC63-00923A	GROUND-P-PUSH BUSHING	1	SNA	
44		JC63-00924A	GROUND-P-SHIELD SMPS	1	SNA	
45		JC63-00925A	GROUND-P-MOTOR FUSER	1	SNA	
46		JC63-00926A	GROUND-P-SHIELD	1	SNA	
47		JC63-01960A	GROUND-PR_FRAME	1	SNA	
48		JC65-00014A	TERMINAL-P-HV CR	1	SNA	
49		JC65-00018A	TERMINAL-TR	1	SNA	
50		JC66-00050A	CAM-CATCH	1	SNA	
51		JC66-00377A	CAM-M-PICK_UP	1	SNA	
52		JC66-00526A	ROLLER-FEED ROLLER 1	1	SNA	
53		JC66-00527A	SHAFT-FEED IDLE	1	SNA	
54		JC66-01160A	SHAFT-M_FEED2	1	SNA	
55		JC66-01165A	GEAR-FEED2 Z27	1	SNA	
56		JC66-01189A	LEVER-M_ACTUATOR FEED	1	SNA	
57		JC66-01190A	LEVER-M_ACT DUP OUT	1	SNA	
58		JC66-01191A	LEVER-M_ACTUATOR REGI	1	SNA	
59		JC68-00317A	LABEL(R)-HOT CAUTION,KME	1	SNA	

FRAME MAIN Parts List

SA : SERVICE AVAILABLE, SNA : SERVICE not AVAILABLE

Drawing#	Dell_ code	SEC_code	Description	Qty	Service	Remark
60		JC68-30928E	LABEL(P)-CAUTION, HOT_FU	1	SNA	
61		JC70-00307A	IPR-P-EARTH TRANSFER	1	SNA	
62		JC70-00312A	IPR-P-TERMINAL CON	3	SNA	
63		JC72-00102A	PMO-BUSHING_TR(L)	1	SNA	
64		JC72-00382B	PMO-BUSHING FEED	3	SNA	
65		JC72-00974A	PMO-ACTUATOR CVR OPEN	1	SNA	
66		JC72-00983A	PMO-LOCKER CST	2	SNA	
67		JC72-00984A	PMO-PLATE GUIDE DEVE_L	1	SNA	
68		JC72-00985A	PMO-PLATE GUIDE DEVE_R	1	SNA	

Drawing#	Dell_ code	SEC_code	Description	Qty	Service	Remark
69		JC75-00049A	MEC-TERMINAL	4	SNA	
70	YX572	JC96-03829B	ELA HOU-GUIDE_DUP F	1	SA	
71		JC93-00311A	DRIVE-FUSER	1	SA	
72		JC96-05479A	ELA HOU-HVPS	1	SA	
73	PF661	JC96-04880A	ELA HOU-MPF	1	SA	
74		JC96-05189A	ELA HOU-FRAME EXIT	1	SNA	
75		JC97-01788A	MEA UNIT-CLUTCH	1	SNA	
76		JC97-02394A	MEA UNIT-BRACKET FEED	1	SNA	
77		JC96-05218B	MEA UNIT-GEAR PICK UP	1	SNA	

5.1.1 ELA HOU-FRAME EXIT

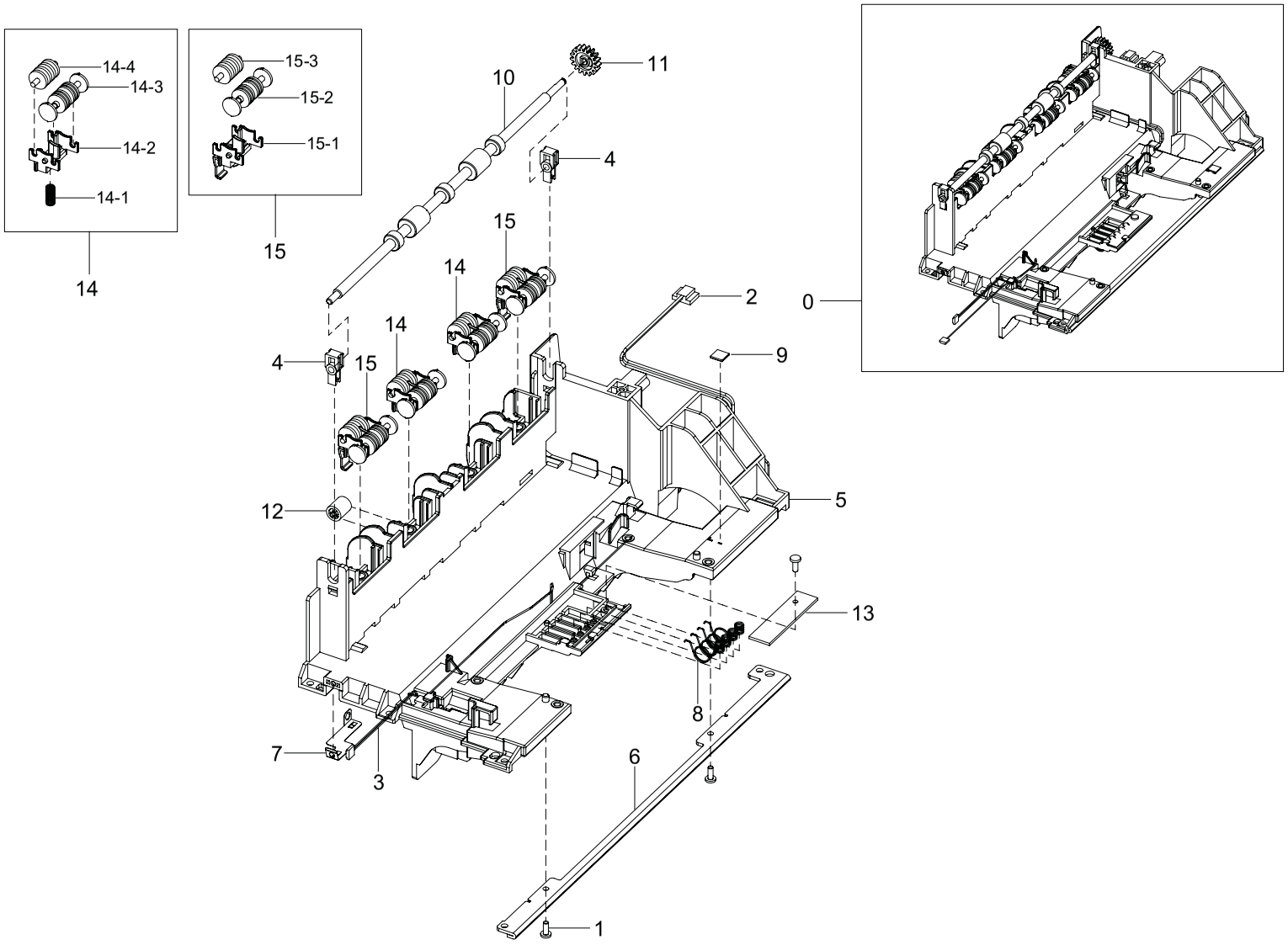

ELA HOU-FRAME EXIT Parts List

SA : SERVICE AVAILABLE, SNA : SERVICE not AVAILABLE

Drawing#	Dell_ code	SEC_code	Description	Qty	Service	Remark
0		JC96-05189A	ELA HOU-FRAME EXIT	1	SNA	
1		6003-000282	SCREW-TAPTITE	3	SNA	
2		JC39-00886A	HARNESS-FUSER_AC	1	SNA	
3		JC39-00888A	HARNESS-LSU_SW	1	SNA	
4		JC61-00829A	HOLDER-BEARING EXIT F/ DOWN	2	SNA	
5		JC61-01941A	FRAME-EXIT	1	SNA	
6		JC61-02155A	PLATE-LSU SUPPORT	1	SNA	
7		JC63-01322A	GROUND-FUSER BRUSH	1	SNA	
8		JC65-00019A	TERMINAL-CRUM	4	SNA	
9		JC66-01283A	DAMPER-FRAME EXIT	1	SNA	
10		JC66-02038A	ROLLER-EXIT F/DOWN	1	SNA	

Drawing#	Dell_ code	SEC_code	Description	Qty	Service	Remark
11		JC66-40209A	GEAR-EXIT	1	SNA	
12		JC72-40981A	PMO-ROLLER UPPER DP	1	SNA	
13		JC92-02007A	PBA-DEVE CRUM IF	1	SNA	
14		JC97-01034A	MEA RACK-EXIT ROLLER	2	SNA	
14-1		JC61-70911A	SPRING ETC-EXIT ROLL FD	1	SNA	
14-2		JC72-41006A	PMO-HOLDER EXIT ROLL	1	SNA	
14-3		JC72-41007A	PMO-ROLLER FD F	1	SNA	
14-4		JC72-41008A	PMO-ROLLER FD R	1	SNA	
15		JC97-03469A	MEA RACK-EXIT ROLLER S	2	SNA	
15-1		JC61-02751A	HOLDER-EXIT ROLL SIDE	1	SNA	
15-2		JC72-41007A	PMO-ROLLER FD F	1	SNA	
15-3		JC72-41008A	PMO-ROLLER FD R	1	SNA	

5.1.2 DRIVE-FUSER

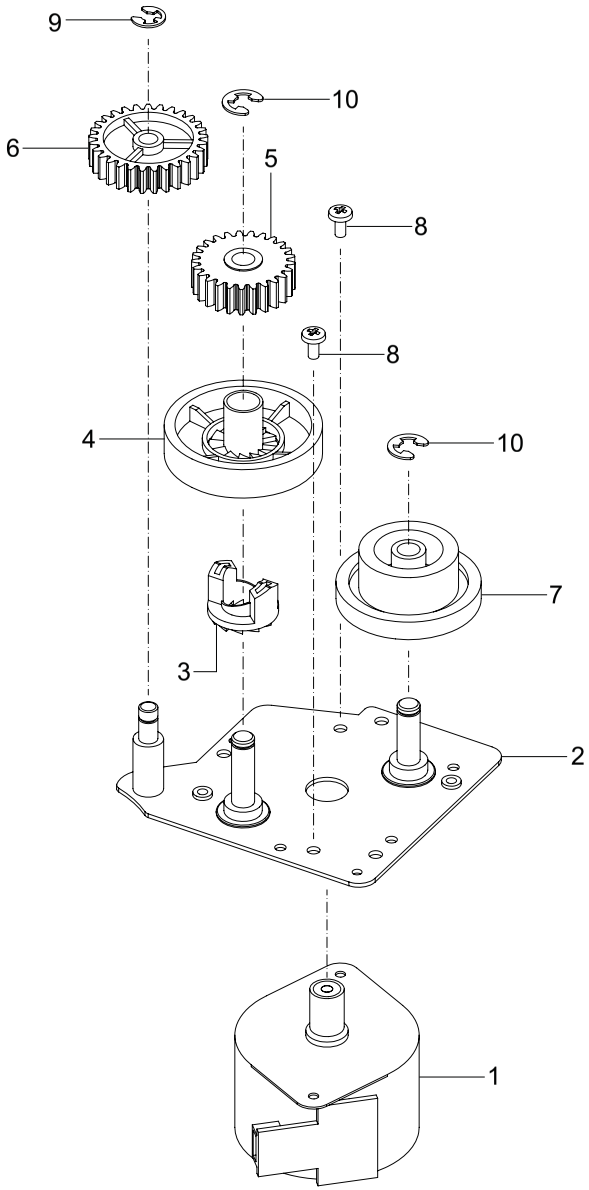

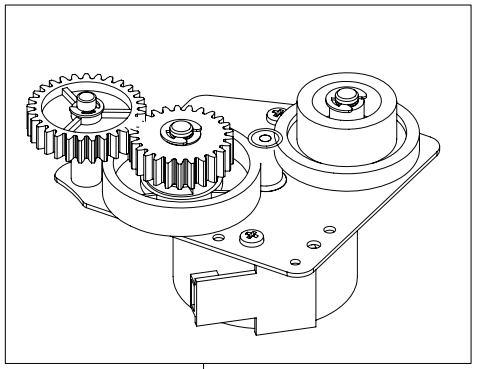

DRIVE-FUSER Parts List

SA : SERVICE AVAILABLE, SNA : SERVICE not AVAILABLE

Drawing#	Dell_ code	SEC_code	Description	Qty	Service	Remark
0		JC93-00311A	DRIVE FUSER	1	SA	
1		JC93-00317A	DRIVE-MOTOR STEP	1	SNA	
2		JC61-01946A	BRACKET-FUSER EXIT	1	SNA	
3		JC66-00340A	GEAR-HUB CLUTCH	1	SNA	
4		JC66-01163A	GEAR-FUSER RDCN IN 95	1	SNA	
5		JC66-00417A	GEAR-RDCN FUSER OUT	1	SNA	

Drawing#	Dell_ code	SEC_code	Description	Qty	Service	Remark
6		JC66-01210A	GEAR-FUSER IDLE FR	1	SNA	
7		JC66-01158A	GEAR-EXIT RDCN 87/24	1	SNA	
8		6003-000269	SCREW-TAPTYPE	2	SNA	
9		6044-000125	RING-E	1	SNA	
10		JC66-00346A	RING-E	2	SNA	

5.1.3 ELA HOU-GUIDE_DUP F

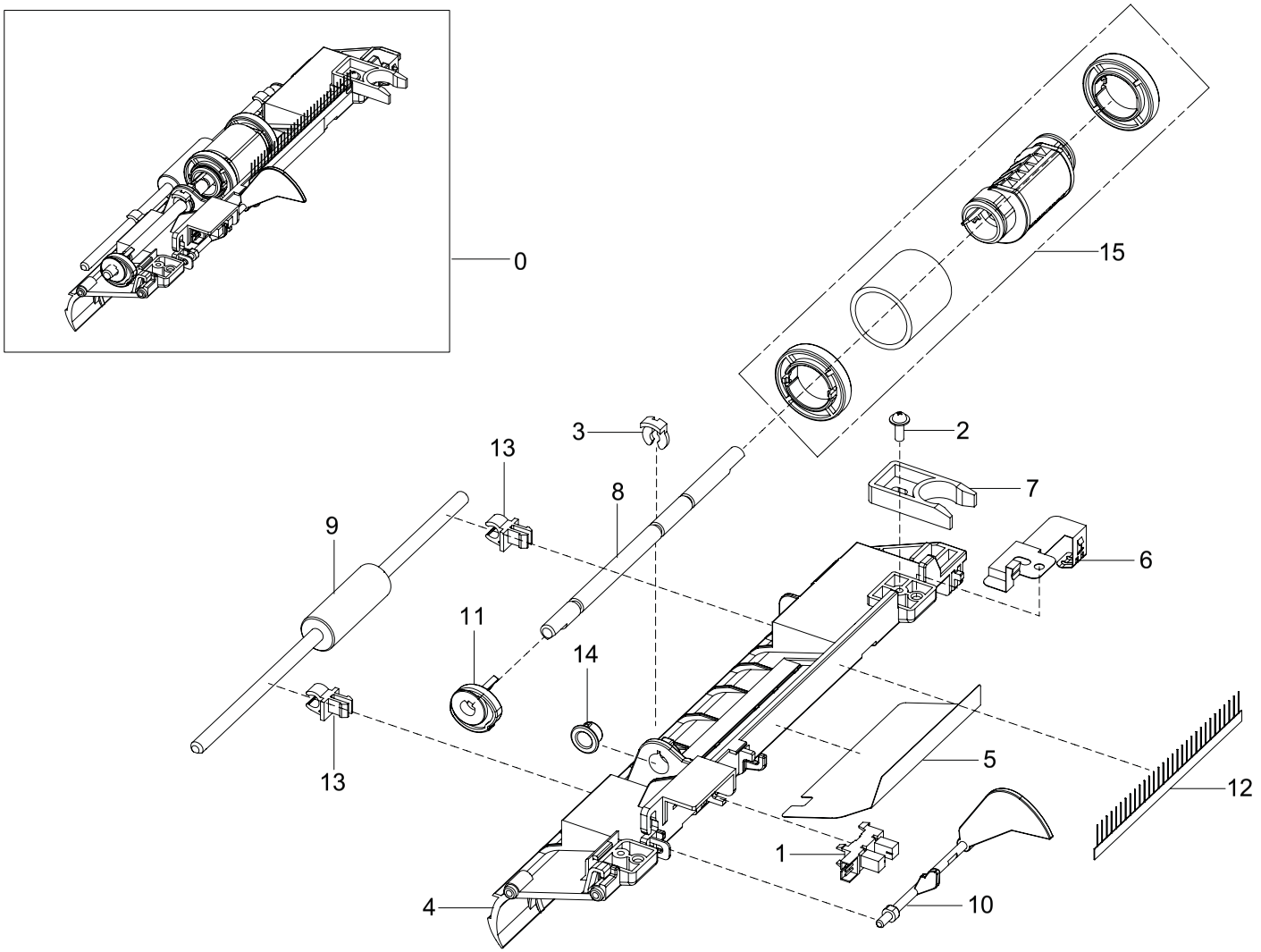

ELA HOU-GUIDE_DUP F Parts List

SA : SERVICE AVAILABLE, SNA : SERVICE not AVAILABLE

Drawing#	Dell_ code	SEC_code	Description	Qty	Service	Remark
0		JC96-03829B	ELA HOU-GUIDE_DUP F	1	SA	
1		0604-001095	PHOTO-INTERRUPTER	1	SNA	
2		6002-000440	SCREW-TAPPING	1	SNA	
3		JC61-01367A	FIXER-M_E RING 4PI	1	SNA	
4		JC61-01600A	GUIDE-M_FRONT DUPLEX	1	SNA	
5		JC63-00992A	SHEET-GUIDE FRONT DU	1	SNA	
6		JC63-01153A	GROUND-P_BRUSH	1	SNA	
7		JC66-00050A	CAM-CATCH	1	SNA	

Drawing#	Dell_ code	SEC_code	Description	Qty	Service	Remark
8		JC66-01171A	SHAFT-PICK UP	1	SNA	
9	T190G	JC66-01173A	ROLLER-FEED	1	SA	
10		JC66-01187A	LEVER-ACTUATOR EMPTY	1	SNA	
11		JC66-01581A	CAM-SHAFT PICK UP	1	SNA	
12		JC67-00208A	BRUSH-ANTISTATIC	1	SNA	
13		JC72-00382B	PMO-BUSHING FEED	2	SNA	
14		JC72-41364A	PMO-BUSHING_P/U,MP	1	SNA	
15	UG594	JC97-02441A	MEA-ROLLER PICK UP	1	SA	

5.1.4 ELA HOU-MPF

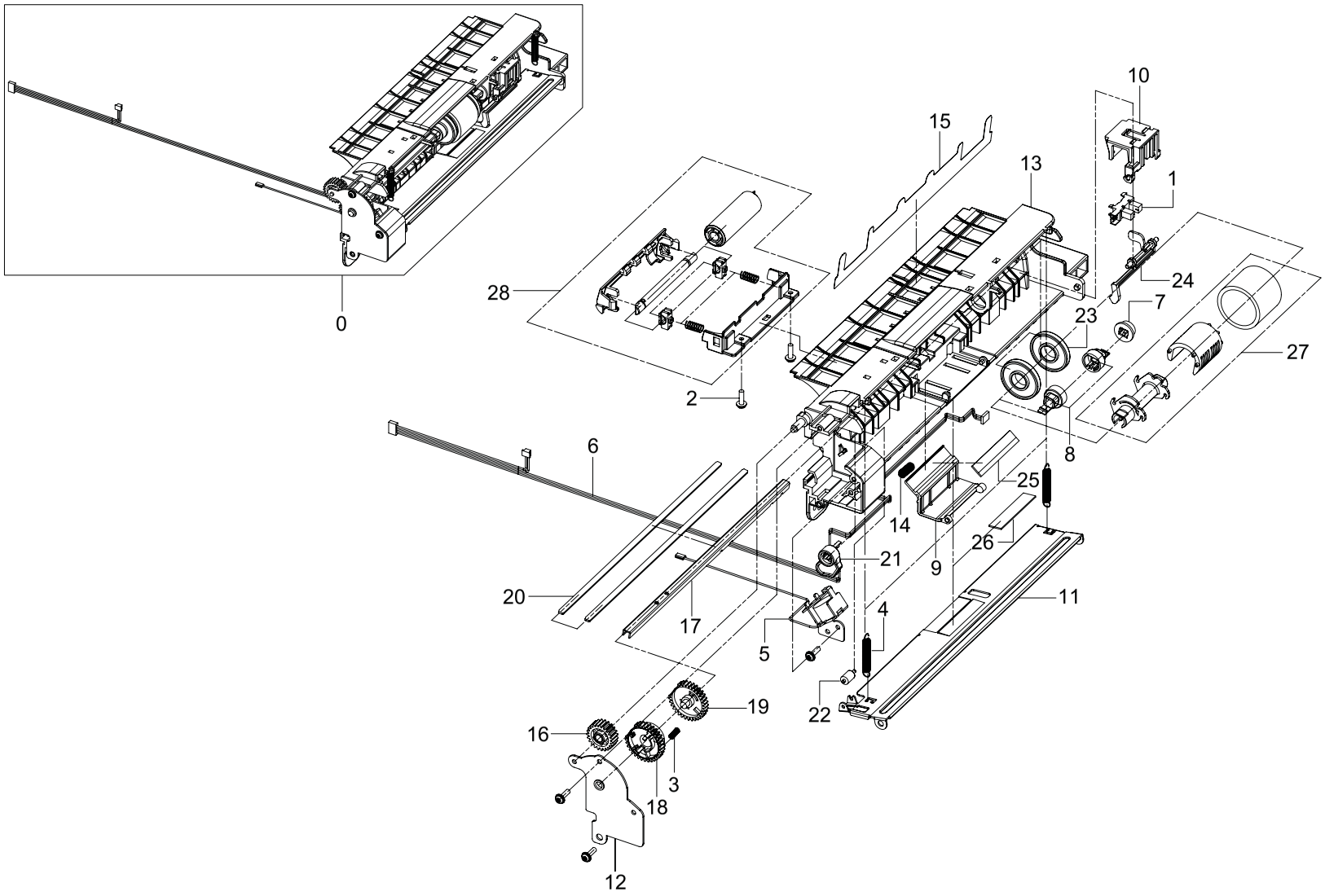

ELA HOU-MPF Parts List

SA : SERVICE AVAILABLE, SNA : SERVICE not AVAILABLE

Drawing#	Dell_ code	SEC_code	Description	Qty	Service	Remark
0		JC96-04880A	ELA HOU-MPF	1	SA	
1		0604-001095	PHOTO-INTERRUPTER	1	SNA	
2		6003-000196	SCREW-TAPTITE	2	SNA	
3		6107-001167	SPRING-CS	2	SNA	
4		6107-001237	SPRING-ES	1	SNA	
5		JC33-00028B	SOLENOID-MP	1	SNA	
6		JC39-00873A	HARNESS-MP	1	SNA	
7		JC61-00587A	BUSH-M-PICK_UP R	1	SNA	
8		JC61-00915A	STOPPER-M-PICK UP_R2	2	SNA	
9		JC61-00924A	HOLDER-M-PAD_MP	1	SNA	
10		JC61-00926A	HOLDER-M-SENSOR_MP	1	SNA	
11		JC61-00927A	PLATE-P-KNOCK UP_MP	1	SNA	
12		JC61-00932A	BRACKET-P-PICKUP_MP	1	SNA	
13		JC61-01603A	FRAME-M_MP	1	SNA	
14		JC61-70911A	SPRING ETC-EXIT ROLL FD	1	SNA	
15		JC63-01094A	SHEET-GUIDE MP	1	SNA	
16		JC66-00396A	GEAR-IDLE 23	1	SNA	
17		JC66-00399A	SHAFT-P-PICK_UP	1	SNA	
18		JC66-00709A	GEAR-M-HOLDER_MP	1	SNA	
19		JC66-00710A	GEAR-M-PICK UP_MP	1	SNA	
20		JC66-00720A	SHAFT-P-CORE	2	SNA	
21		JC66-01205A	CAM-M_PICK UP MP	1	SNA	
22		JC72-00761A	PMO-ROLLER CAM.MP	1	SNA	
23		JC72-00982A	PMO-IDLE PICK_UP	2	SNA	
24		JC72-01338A	PMO-M-ACT EMPTY MP	1	SNA	
25		JC73-00140A	RPR-FRICTION PAD	1	SNA	
26		JC73-00141A	RPR-PAD CASSETTE	1	SNA	
27	TF129	JC97-02034A	MEA-PICK UP_MP	1	SA	
28		JC97-02443A	MEA-IDLE FEED	1	SNA	

5.1.5 MEA_UNIT-BRACKET_FEED

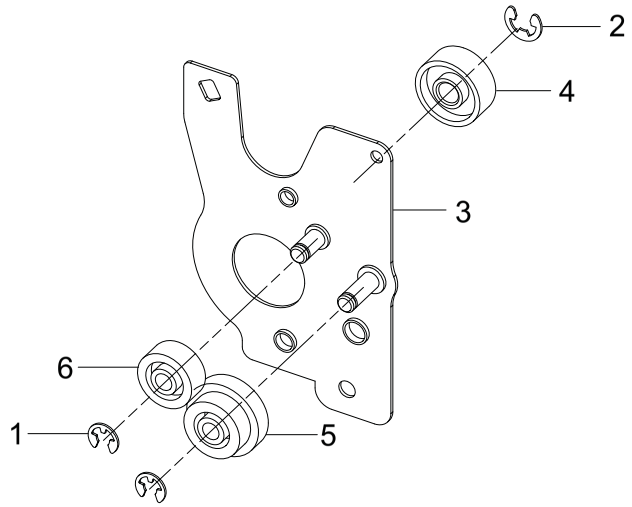

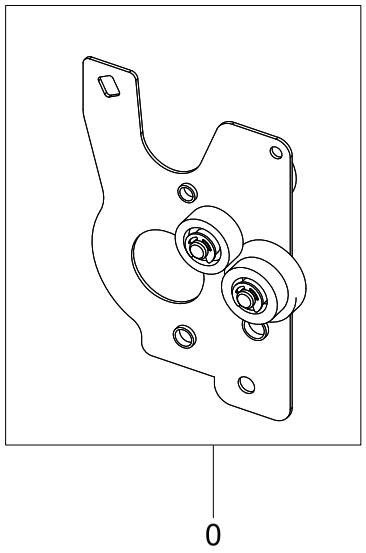

MEA_UNIT-BRACKET_FEED Parts List

SA : SERVICE AVAILABLE, SNA : SERVICE not AVAILABLE

Drawing#	Dell_ code	SEC_code	Description	Qty	Service	Remark
0		JC97-02394A	MEA UNIT-BRACKET FEED	1	SNA	
1		6044-000125	RING-E	2	SNA	
2		6044-000231	RING-E	1	SNA	
3		JC61-01582A	BRACKET-P-FEED	1	SNA	

Drawing#	Dell_ code	SEC_code	Description	Qty	Service	Remark
4		JC66-00484A	GEAR-T2 IDEL_Z27	1	SNA	
5		JC66-01164A	GEAR-RETARD 39/19	1	SNA	
6		JC66-01166A	GEAR-IDLE Z29 HELICAL	1	SNA	

5.1.6 MEA UNIT-CLUTCH

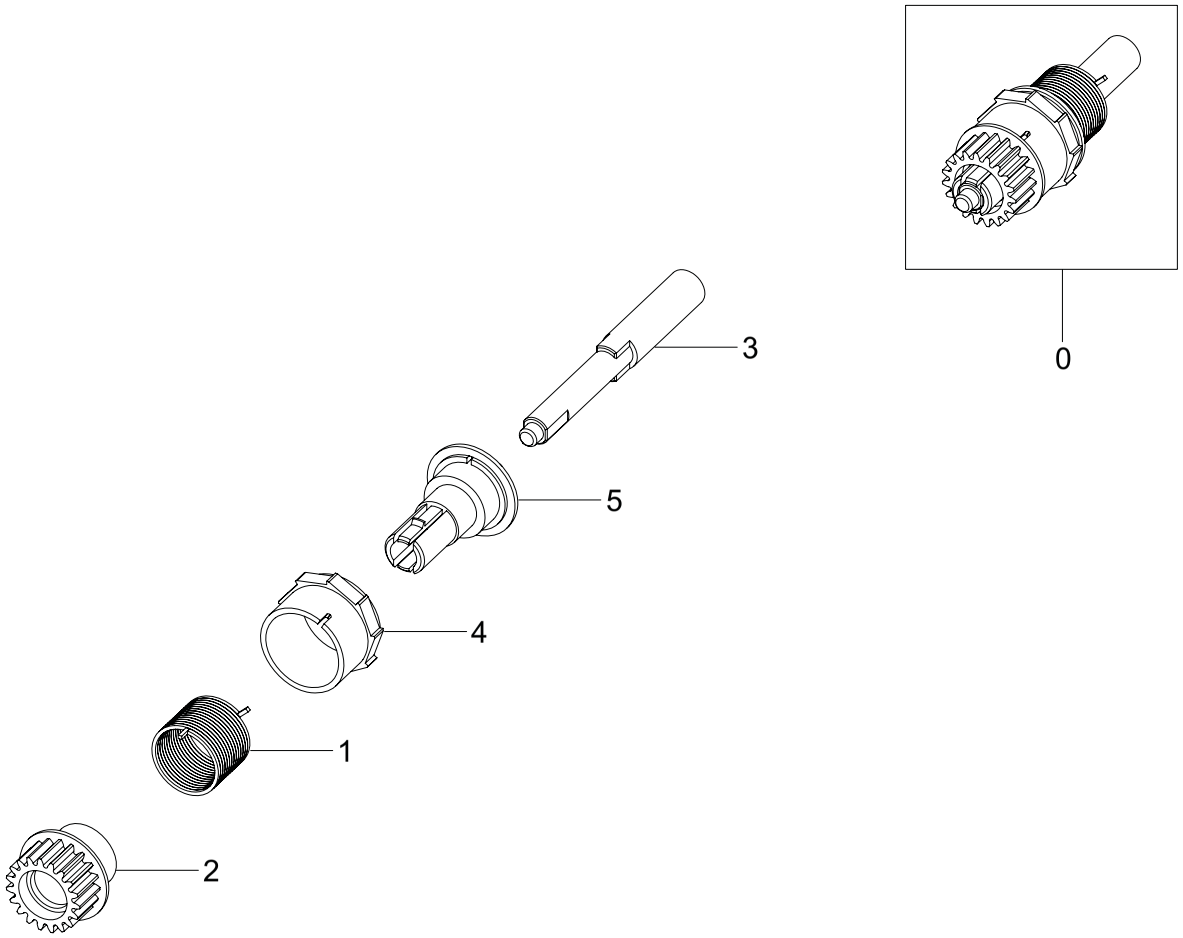

MEA UNIT-CLUTCH Parts List

SA : SERVICE AVAILABLE, SNA : SERVICE not AVAILABLE

Drawing#	Dell_ code	SEC_code	Description	Qty	Service	Remark
0		JC97-01788A	MEA UNIT-CLUTCH	1	SNA	
1		6107-001171	SPRING-TS	1	SNA	
2		JC66-00393A	GEAR-FEED 1	1	SNA	
3		JC66-00398A	SHAFT-FEED	1	SNA	
4		JC72-00978A	PMO-COLLAR_SPRING	1	SNA	
5		JC72-00981A	PMO-HUB CLUTCH	1	SNA	

5.2 FUSER

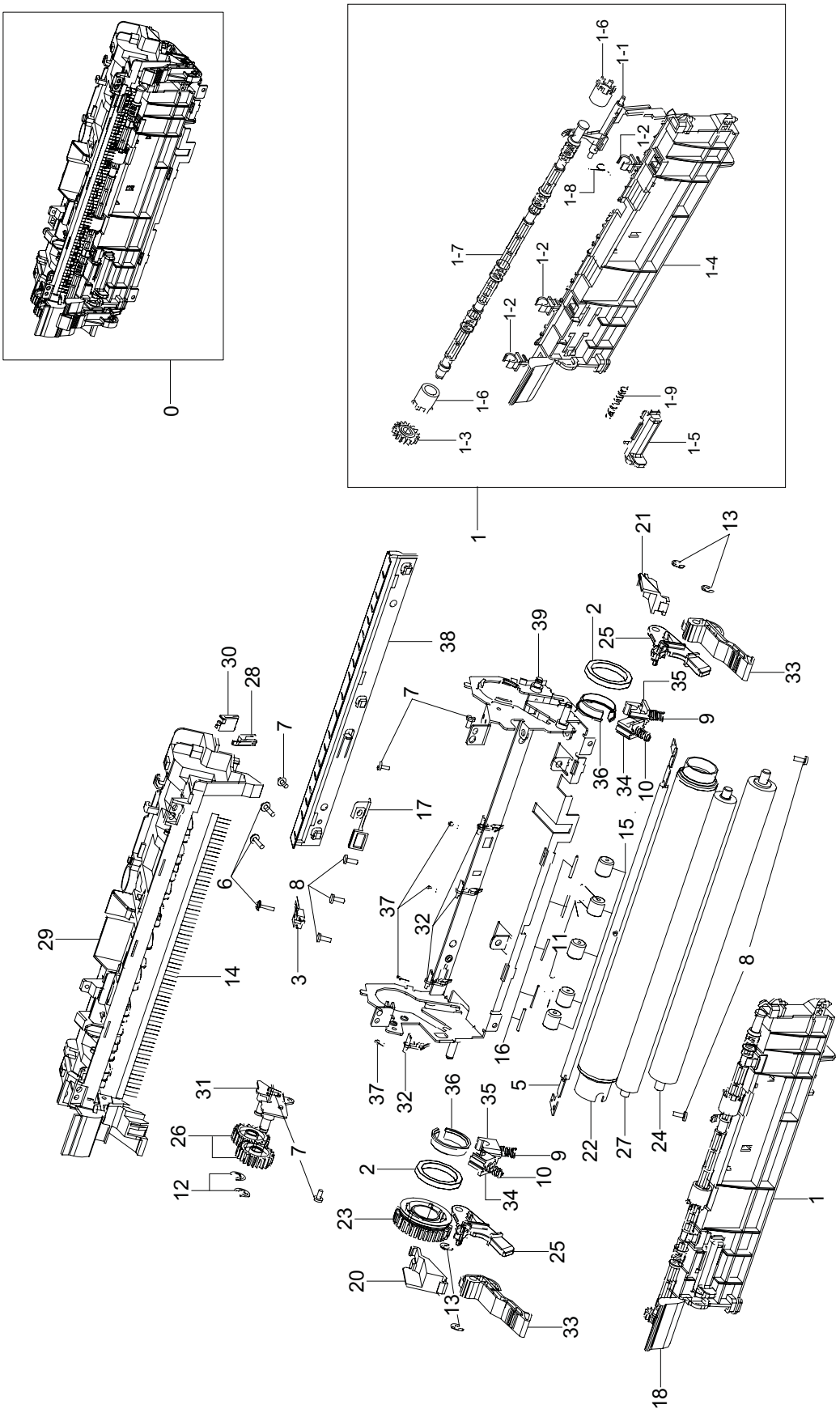
0
1
1-1
1-2
1-3
1-4
1-5
1-6
1-7
1-8
1-9
2
3
5
6
7
8
9
10
11
12
13
14
15
16
17
18
20
21
22
23
24
25
26
27
28
29
30
31
32
33
34
35
36
37
38
39

FUSER Parts List

SA : SERVICE AVAILABLE, SNA : SERVICE not AVAILABLE

Drawing#	Dell_ code	SEC_code	Description	Qty	Service	Remark
0	KW449	JC96-05063B	ELA UNIT-FUSER(110V)	1	SA	
0	KW450	JC96-05064B	ELA UNIT-FUSER(220V)	1	SA	
1		JC97-03164A	MEA UNIT-DOOR FUSER	1	SNA	
1-1		JC66-01423A	ACTUATOR-EXIT	1	SNA	
1-2		JC61-02158A	BUSH-TX	3	SNA	
1-3		JC66-01583A	GEAR-EXIT	1	SNA	
1-4		JC61-01955A	GUIDE-REAR	1	SNA	
1-5		JC61-01625A	HOLDER-M_REAR_LEVER	1	SNA	
1-6		JC73-00259A	4712-001084	2	SNA	
1-7		JC66-01584A	SHAFT-EXIT_F/UP	1	SNA	
1-8		JC61-70903A	SPRING ETC-ACTUATOR	1	SNA	
1-9		6107-001237	SPRING-ES	1	SNA	
1-10		JC68-01581A	LABEL(P)-CAUTION HOT	1	SNA	
2		6601-001479	BEARING-BALL	2	SNA	
3		1404-001364	THERMISTOR-NTC ASSY	1	SNA	
4		4712-001084	THERMOSTAT	1	SNA	
5		4713-001207	LAMP-HALOGEN (110V)	1	SNA	
5		4713-001208	LAMP-HALOGEN (220V)	1	SNA	
6		6003-000196	SCREW-TAPTITE	3	SNA	
7		6003-000269	SCREW-TAPTITE	5	SNA	
8		6003-000282	SCREW-TAPTITE	5	SNA	
9		6107-001267	SPRING-CS	2	SNA	
10		6107-001246	SPRING-CS	2	SNA	
11		6107-001159	SPRING-TS	2	SNA	
12		6044-000231	RING-E	2	SNA	
13		6044-000125	RING-E	4	SNA	
14		JC75-00095A	MEC-BRUSH ANTISTATIC	1	SNA	
15		JC72-20902A	PEX-ROLLER F/UP(2)	5	SNA	

Drawing#	Dell_ code	SEC_code	Description	Qty	Service	Remark
16		JC70-20901A	IEX-SHAFT IDLE,F/UP	5	SNA	
17		JC70-00538A	ELECTRODE-EARTH_UPPER	1	SNA	
18		JC68-00408A	LABEL(R)-LV FUSER (110V)	1	SNA	
18		JC68-00409A	LABEL(R)-HV FUSER (220V)	1	SNA	
19		2205-000005	GREASE-BEARING	0.1	SNA	
20		JC67-00254A	CAP-LAMP_R	1	SNA	
21		JC67-00253A	CAP-LAMP_L	1	SNA	
22		JC66-01593B	ROLLER-HEAT	1	SNA	
23		JC66-01588A	GEAR-FUSER	1	SNA	
24		JC66-01453A	ROLLER-PRESSURE	1	SNA	
25		JC66-01424A	LEVER-LINK_JAM	2	SNA	
26		JC66-01153A	GEAR-IDLE 23 FUSER	2	SNA	
27		JC66-01079A	ROLLER-PRESSURE	1	SNA	
28		JC63-01961A	GROUND-PR_FUSER	1	SNA	
29		JC63-01347A	COVER-FUSER_UPPER	1	SNA	
30		JC61-02631A	GUIDE-GROUND_PR	1	SNA	
31		JC61-02156A	BRACKET-FUSER	1	SNA	
32		JC61-02154A	GUIDE-CLAW	4	SNA	
33		JC61-01977A	HOLDER-JAM	2	SNA	
34		JC61-01961A	BUSH-PR_2ND	2	SNA	
35		JC61-01960A	BUSH-PR_1ST	2	SNA	
36		JC61-01958A	BUSH-HR	2	SNA	
37		JC61-01950A	SPRING ETC-CLAW	4	SNA	
38		JC61-01949A	GUIDE-INPUT	1	SNA	
39		JC61-01948A	FRAME-FUSER	1	SNA	
40		JC39-00521A	CBF HARNESS-FUSER REC	1	SNA	
41		JC39-00520A	CBF HARNESS-FUSER CON	1	SNA	

6. MEA UNIT-DUPLEX

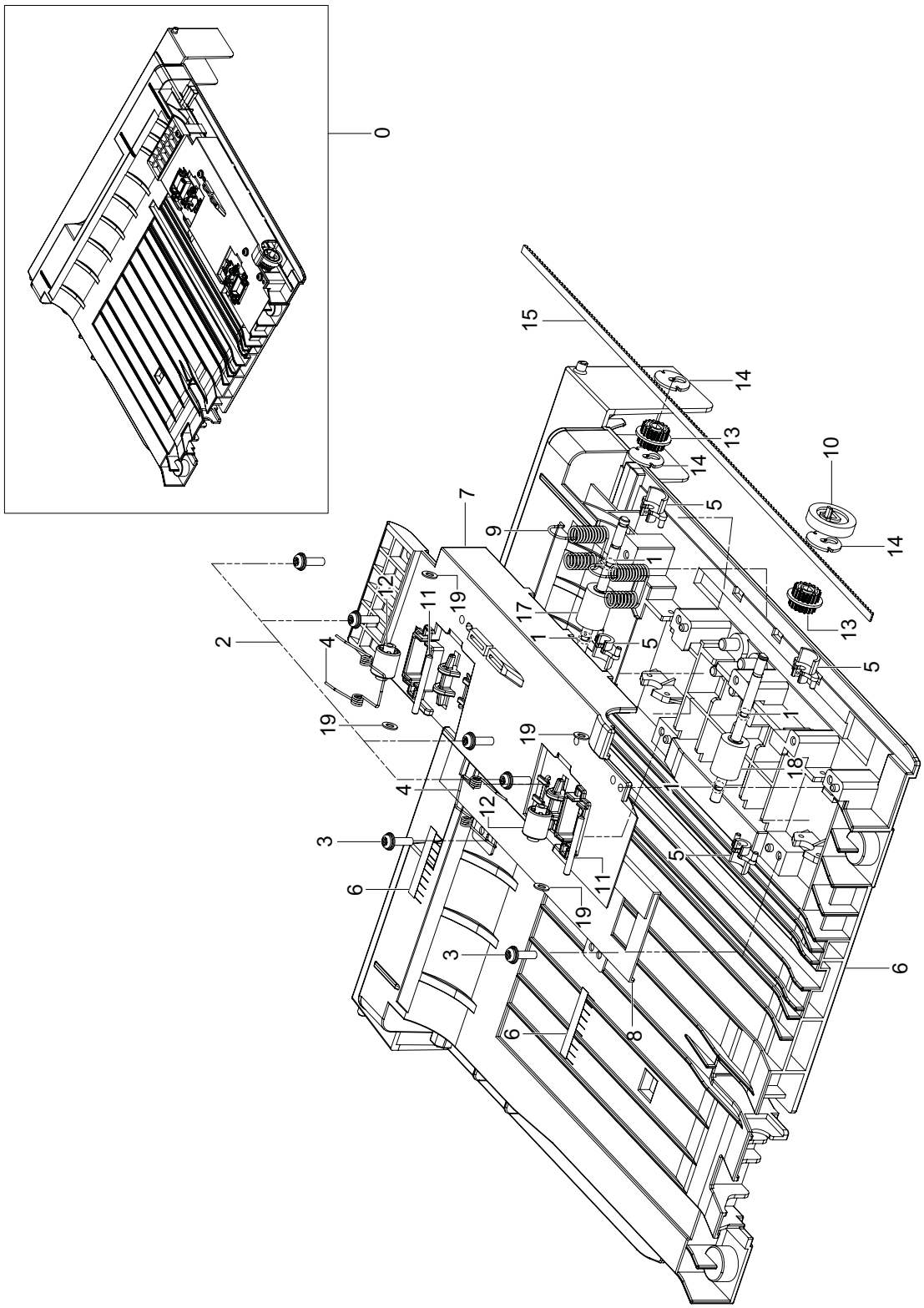

MEA UNIT-DUPLEX Parts List

SA : SERVICE AVAILABLE, SNA : SERVICE not AVAILABLE

Drawing#	Dell_ code	SEC_code	Description	Qty	Service	Remark
0		JC97-02393B	MEA UNIT-DUPLEX	1	SA	
1		0205-001003	GREASE-BEARING	0.001	SNA	
2		6003-000196	SCREW-TAPTITE	2	SNA	
3		6003-000196	SCREW-TAPTITE	4	SNA	
4		6107-001156	SPRING-TS	2	SNA	
5		JC61-00665A	BUSH-M-FEED, DUP	4	SNA	
6		JC61-01594B	FRAME-M_DUP	1	SNA	
7		JC61-01595A	GUIDE-M_UPPER DUP	1	SNA	
8		JC61-01596A	BRACKET-P-ALIGN DUP	1	SNA	
9		JC65-00017A	TERMINAL-P-GND DUP	2	SNA	

Drawing#	Dell_ code	SEC_code	Description	Qty	Service	Remark
10		JC66-00038A	GEAR-EXIT F/DOWN	1	SNA	
11		JC66-00444A	SHAFT-IDLE ROLL, DUP	2	SNA	
12		JC66-00896A	ROLLER-M-IDLE_ DUP	2	SNA	
13		JC66-00899A	PULLEY-18_DUP	2	SNA	
14		JC66-00900A	PULLEY-M-18-DUMMY_DUP	3	SNA	
15		JC66-20901A	BELT-TIMMING	1	SNA	
16		JC67-00205A	BRUSH-DUPLEX	2	SNA	
17		JC96-04983A	ELA UNIT-ROLLER_DUP	1	SNA	
18		JC96-04983B	ELA UNIT-ROLLER_DUP2	1	SNA	
19		JK72-00058A	PCT-SILP WASHER	4	SNA	

7. SCANNER

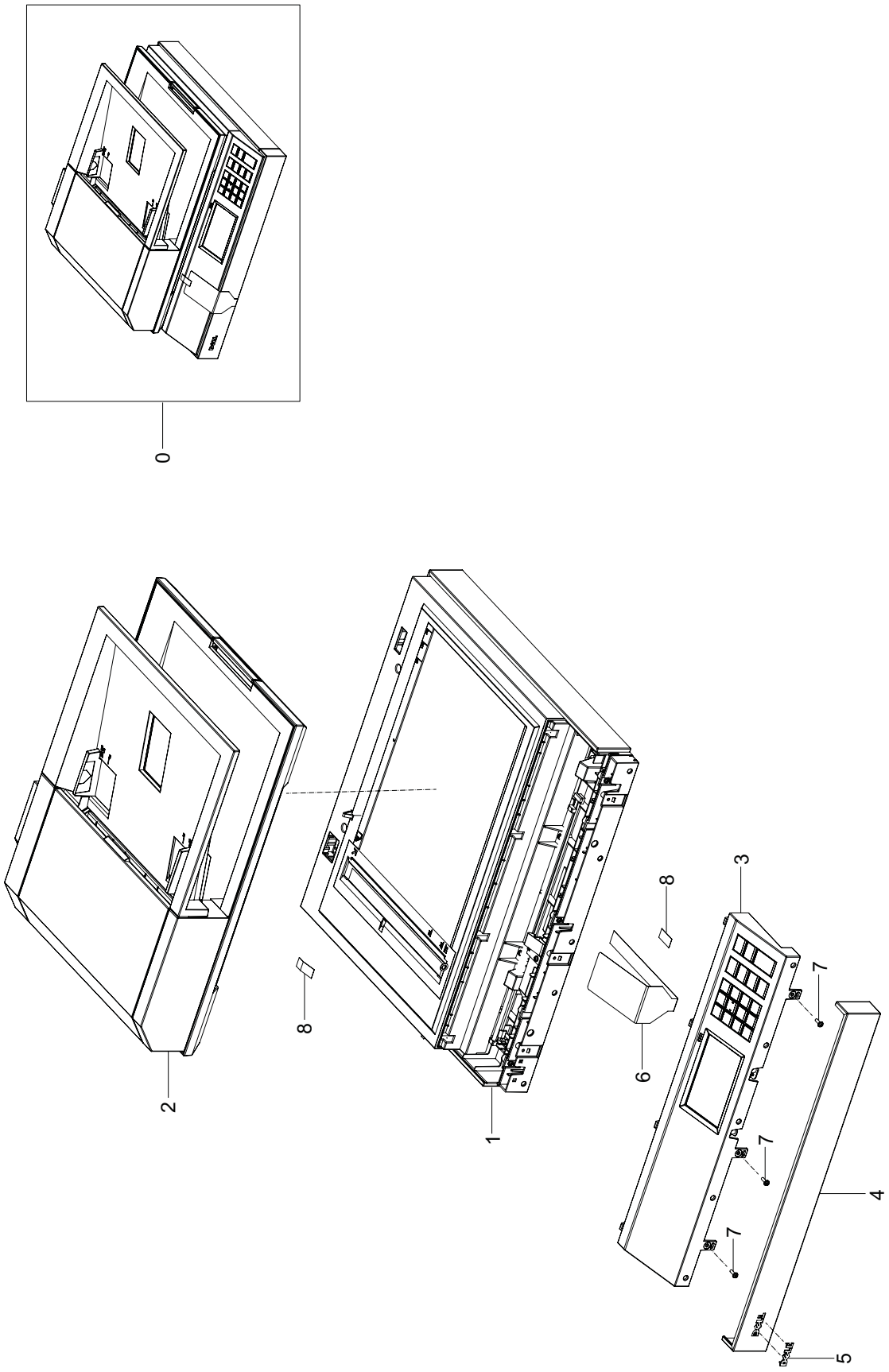

SCANNER Parts List

SA : SERVICE AVAILABLE, SNA : SERVICE not AVAILABLE

Drawing#	Dell_ code	SEC_code	Description	Qty	Service	Remark
0		JC97-03865A	SCANNER	1	SNA	
0		JC97-03865B	SCANNER	1	SNA	
1		JC96-05184A	ELA HOU-DADF	1	SA	
2		JC97-03846A	PLATEN	1	SNA	
3		JC97-03848A	OPE	1	SA	
3		JC97-03848B	OPE	1	SA	

Drawing#	Dell_ code	SEC_code	Description	Qty	Service	Remark
4		JC63-02807A	COVER-SCAN BAND F	1	SNA	
5		JC64-00440A	BADGE-DELL	1	SNA	
6		JC68-01685B	LABEL-INFORMATION	1	SNA	
7		6003-000196	SCREW-TAPTYPE	3	SA	
8		0203-001159	TAPE-FILAMENT	0.05	SNA	

7.1 OPE

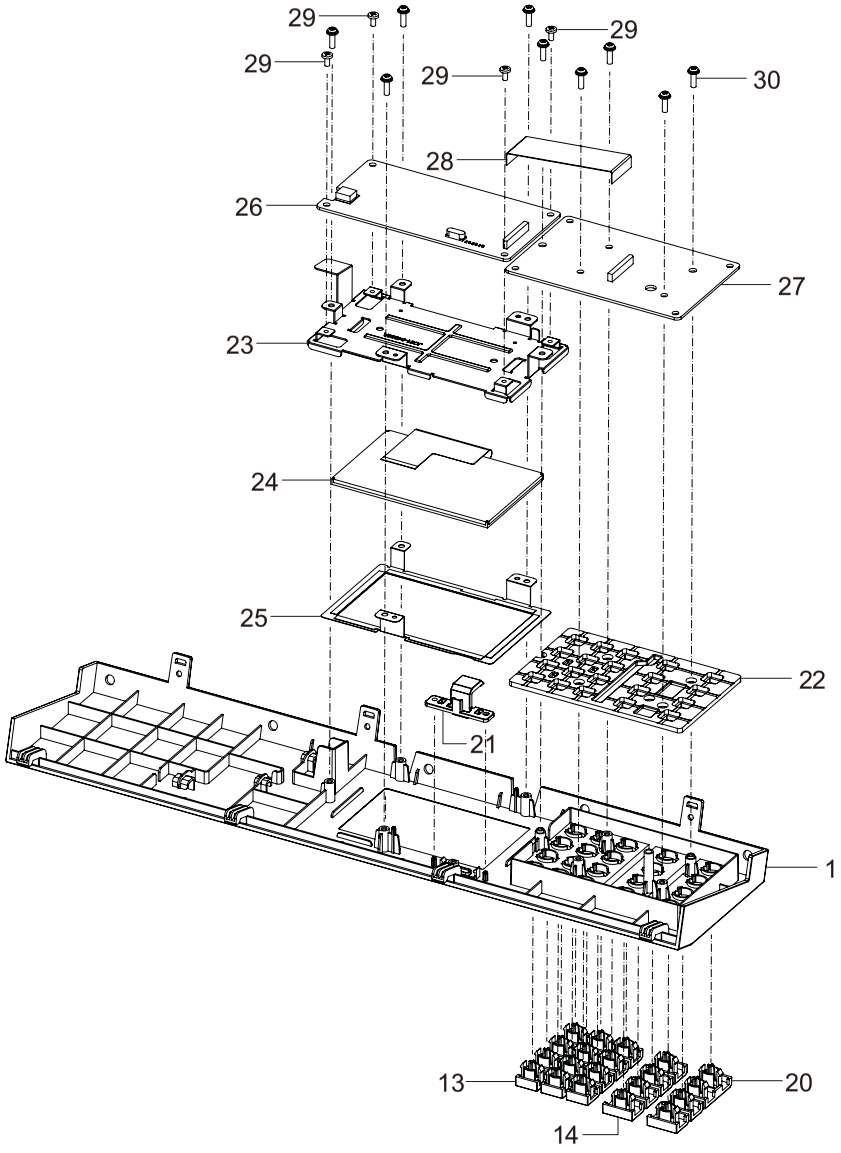
29
29
29
29
30
28
26
27
23
24
25
22
21
1
13
20
14

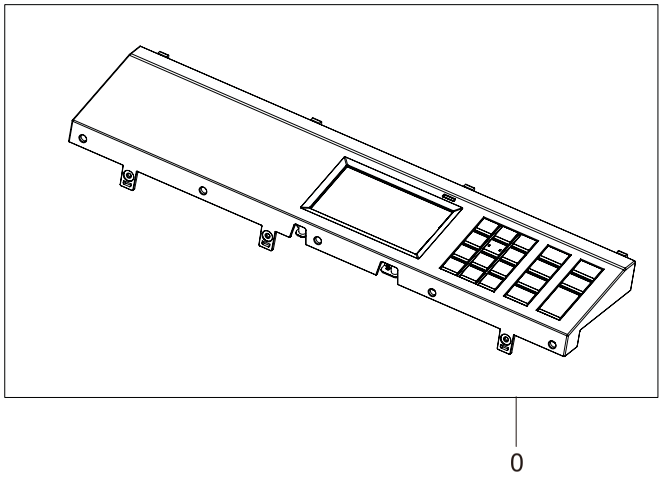
0

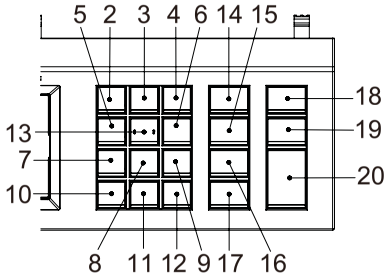
5 2 3 4 6 14 15
18
13
19
7
20
10
8 11 12 9 17 16

OPE Parts List

SA : SERVICE AVAILABLE, SNA : SERVICE not AVAILABLE

Drawing#	Dell_ code	SEC_code	Description	Qty	Service	Remark
0		JC97-03848A	OPE	1	SA	A type: Text/Icon
0		JC97-03848B	OPE	1	SA	B type: Icon
1		JC63-02809A	COVER-OPE	1	SNA	
2		JC64-00396A	KEY-NUMERICAL	1	SNA	
3		JC64-00396B	KEY-NUMERICAL	1	SNA	
4		JC64-00396C	KEY-NUMERICAL	1	SNA	
5		JC64-00396D	KEY-NUMERICAL	1	SNA	
6		JC64-00396E	KEY-NUMERICAL	1	SNA	
7		JC64-00396F	KEY-NUMERICAL	1	SNA	
8		JC64-00396G	KEY-NUMERICAL	1	SNA	
9		JC64-00396H	KEY-NUMERICAL	1	SNA	
10		JC64-00396J	KEY-NUMERICAL	1	SNA	
11		JC64-00396K	KEY-NUMERICAL	1	SNA	
12		JC64-00396L	KEY-NUMERICAL	1	SNA	
13		JC64-00395A	KEY-BLIND DOT	1	SNA	
14		JC64-00593A	KEY-FUNCTION	1	SNA	A type
14		JC64-00593G	KEY-FUNCTION	1	SNA	B type
15		JC64-00593B	KEY-FUNCTION	1	SNA	A type
15		JC64-00593H	KEY-FUNCTION	1	SNA	B type
16		JC64-00593C	KEY-FUNCTION	1	SNA	A type

Drawing#	Dell_ code	SEC_code	Description	Qty	Service	Remark
16		JC64-00593J	KEY-FUNCTION	1	SNA	B type
17		JC64-00593D	KEY-FUNCTION	1	SNA	A type
17		JC64-00593K	KEY-FUNCTION	1	SNA	B type
18		JC64-00593E	KEY-FUNCTION	1	SNA	A type
18		JC64-00593L	KEY-FUNCTION	1	SNA	B type
19		JC64-00593F	KEY-FUNCTION	1	SNA	A type
19		JC64-00593M	KEY-FUNCTION	1	SNA	B type
20		JC64-00594A	KEY-START	1	SNA	A type
20		JC64-00594B	KEY-START	1	SNA	B type
21		JC67-00482A	LENS-STATUS	1	SNA	
22		JC73-00331A	RUBBER-OPE KEY	1	SNA	
23		JC97-03847A	OPE-FRAME LCD	1	SNA	
24		JC07-00017A	LCD	1	SA	
25		JC97-03850A	OPE-FRAME LCD SUB	1	SNA	
26		JC92-02324A	PBA-OPE	1	SA	
27		JC92-02323A	PBA-OPE KEY	1	SA	
28		JC39-01406A	FLAT CABLE	1	SNA	
29		6003-000269	SCREW-TAPTYPE	4	SA	
30		6003-000196	SCREW-TAPTYPE	10	SA	

7.2 PLATEN

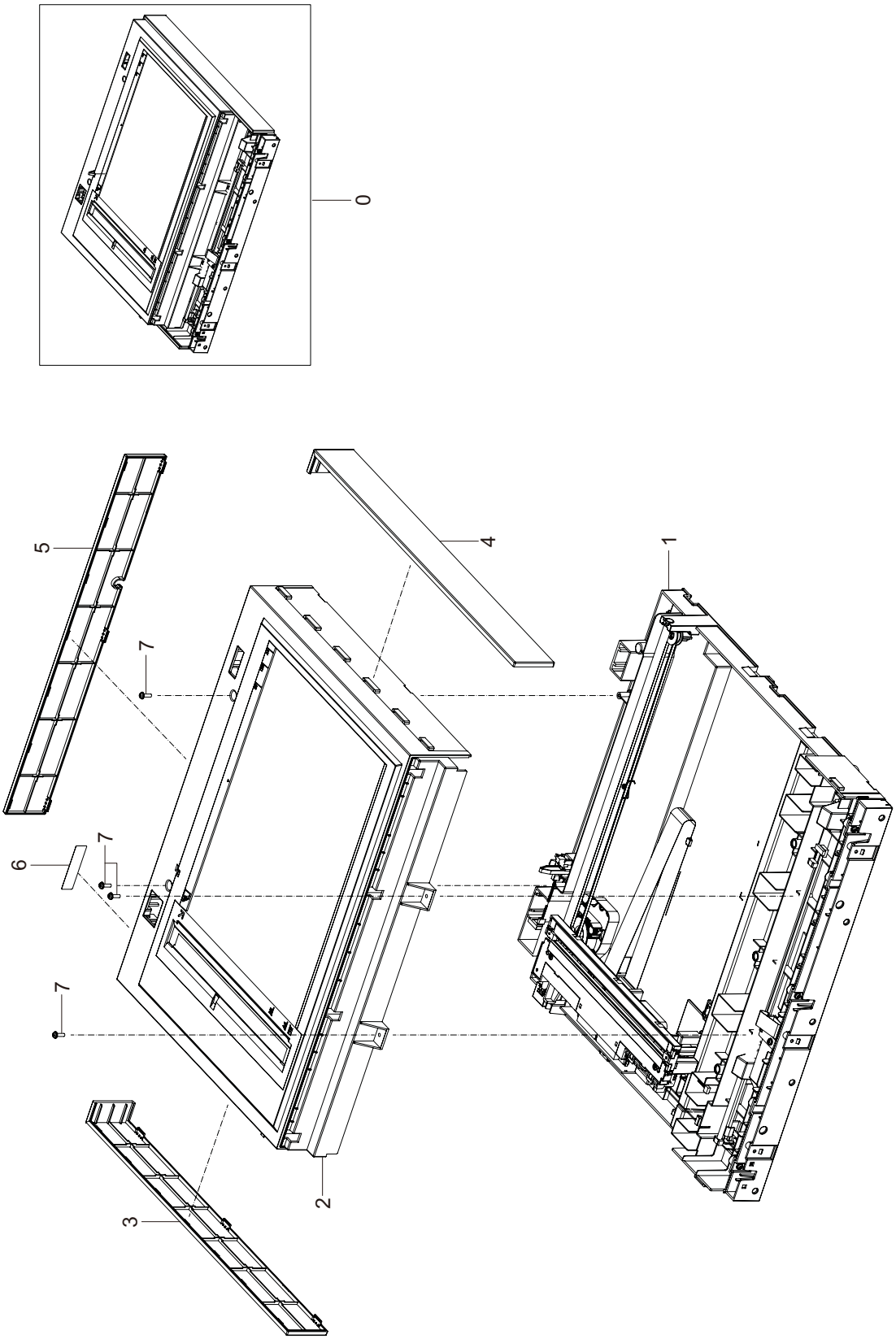

PLATEN Parts List

SA : SERVICE AVAILABLE, SNA : SERVICE not AVAILABLE

Drawing#	Dell_ code	SEC_code	Description	Qty	Service	Remark
0		JC97-03846A	PLATEN	1	SNA	
1		JC97-03849A	PLATEN-LOWER	1	SNA	
2		JC97-03283A	MEA-SCAN UPPER	1	SA	
3		JC63-01827A	COVER-SCAN BAND L	1	SNA	
4		JC63-01828A	COVER-SCAN BAND R	1	SNA	
5		JC63-01829A	COVER-SCAN BAND REAR	1	SNA	
6		JC68-01381B	LABEL(R)-PPID(DEVE)	1	SNA	
7		6003-000196	SCREW-TAPTYPE	4	SA	

7.2.1 MEA-SCAN UPPER

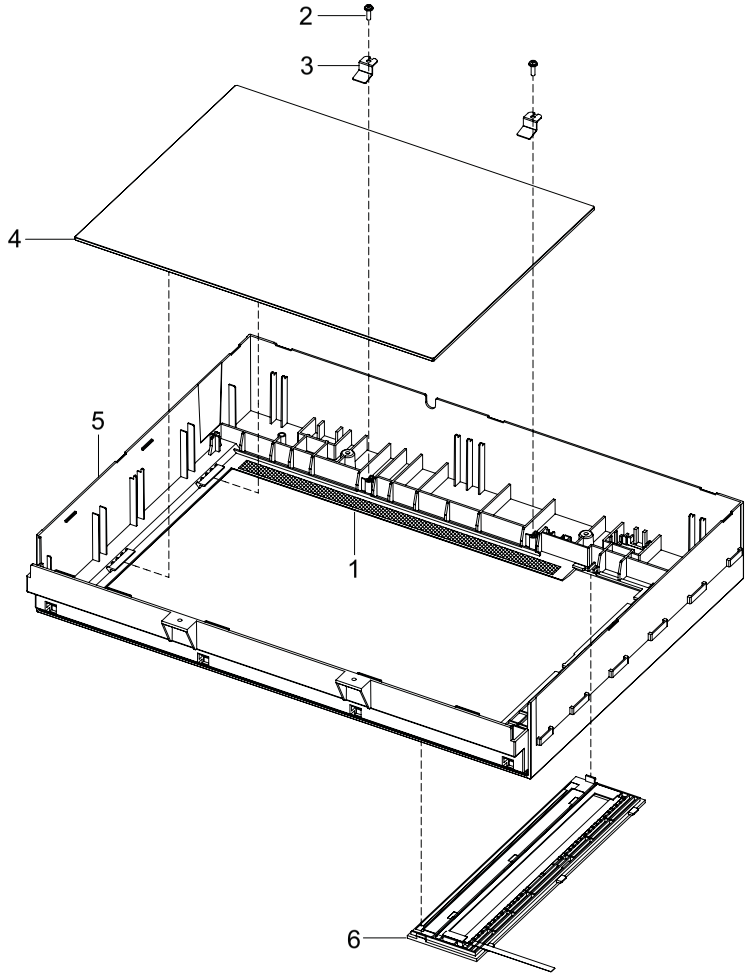

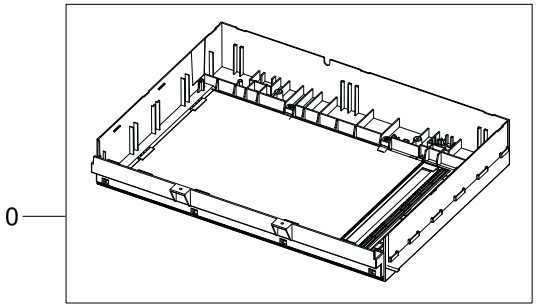

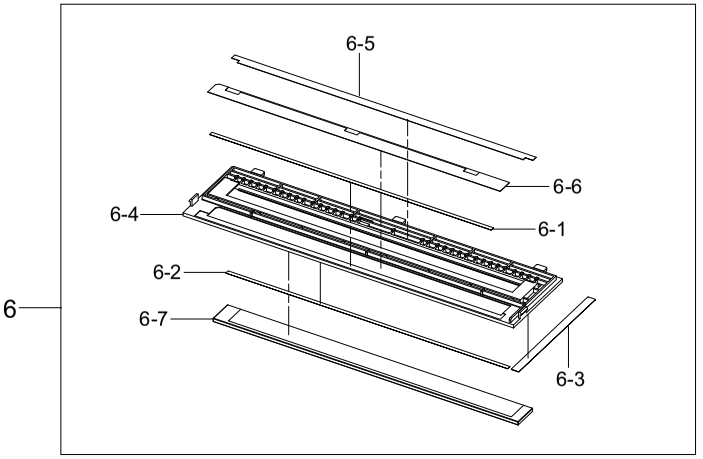

MEA-SCAN UPPER Parts List

SA : SERVICE AVAILABLE, SNA : SERVICE not AVAILABLE

Drawing#	Dell_ code	SEC_code	Description	Qty	Service	Remark
0		JC97-03283A	MEA-SCAN UPPER	1	SNA	
1		0203-001267	TAPE-DOUBLE FACE	1	SNA	
2		6003-000196	SCREW-TAPTITE	1	SNA	
3		JB70-00148A	IPR-HOLDER GLASS	1	SNA	
4		JC01-00001A	GLASS-SCAN	1	SNA	
5		JC63-01831A	COVER-SCAN UPPER	1	SNA	
6		JC97-03281A	MEA-SCAN DUMMY UPPER	1	SNA	
6-1		0203-001266	TAPE-DOUBLE FACE	1	SNA	
6-2		0203-001744	TAPE-DOUBLE FACE	1	SNA	
6-3		JC02-00013A	TAPE ETC-DOUBLE TAPE SMALL	1	SNA	
6-4		JC63-00152J	COVER-SCAN DUMMY	1	SNA	
6-5		JC63-01152A	SHEET-ADF GLASS	1	SNA	
6-6		JC63-01674A	SHEET-SHADING	1	SNA	
6-7		JC74-00021A	MCT-GLASS ADF	1	SNA	

7.2.2 PLATEN-LOWER

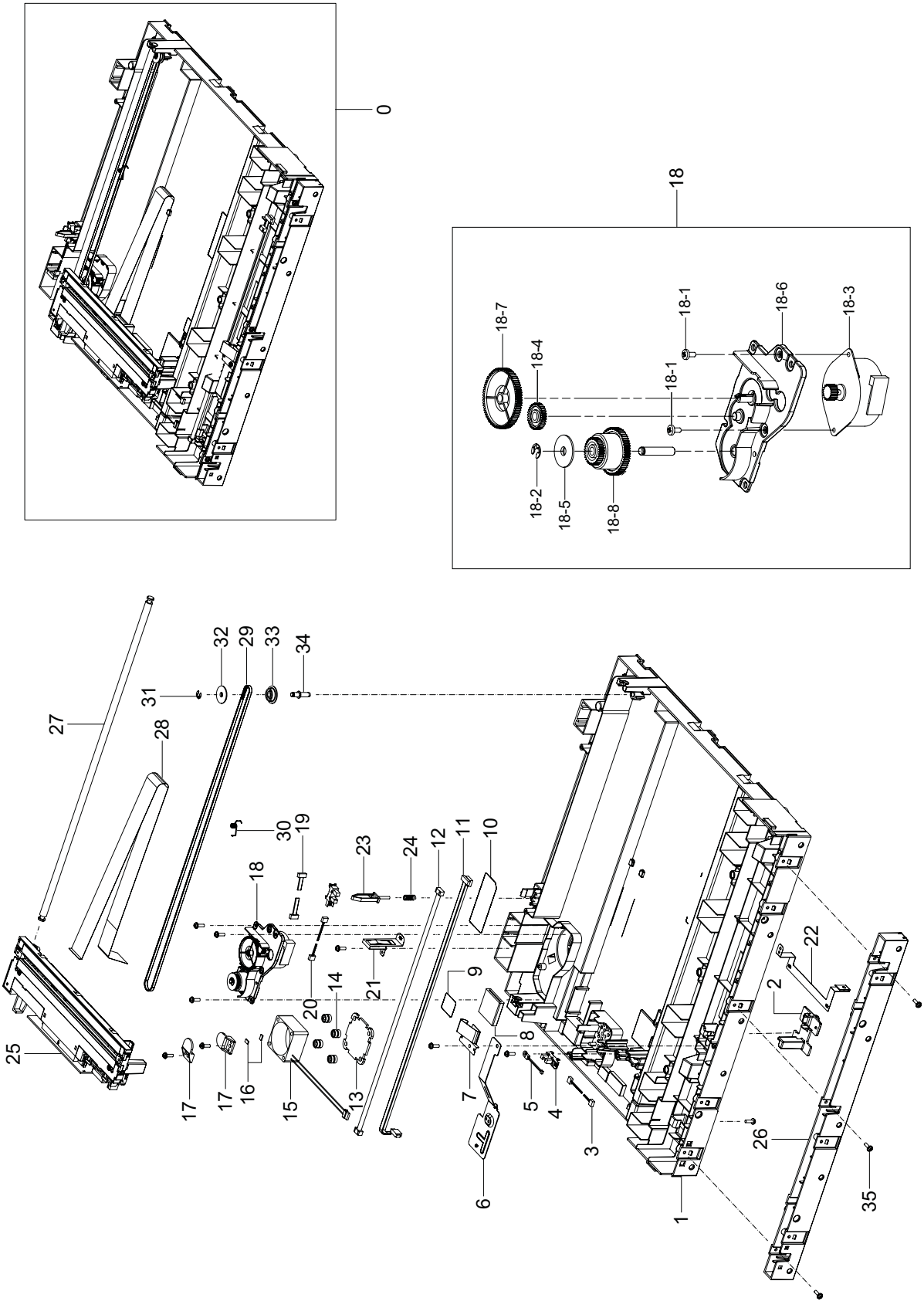

PLATEN-LOWER Parts List

SA : SERVICE AVAILABLE, SNA : SERVICE not AVAILABLE

Drawing#	Dell_ code	SEC_code	Description	Qty	Service	Remark
0		JC97-03849A	PLATEN-LOWER	1	SNA	
1		JC63-01830A	COVER-SCAN LOWER	1	SNA	
2		JC61-02535A	HOLDER-CCD	1	SNA	
3		JC61-04007A	PLATE-ENGINE LCD	1	SNA	
4		0604-001095	PHOTO-INTERRUPTER	2	SA	
5		1404-001417	THERMISTOR-NTC ASSY	1	SA	
6		JC61-04007A	PLATE-ENGINE LCD	1	SNA	
7		JC63-02044A	GROUND-PLATE LCD	1	SNA	
8		JC96-04726A	ELA UNIT-CORE	1	SA	
9		JC68-02148A	LABEL-INFORMATION	1	SNA	
10		JC68-02139A	LABEL-CAUTION	1	SNA	
11		JC39-01408A	HARNESS-OPE MAIN	1	SA	
12		JC39-01421A	HARNESS-USB OPE	1	SA	
13		JC72-01486A	SPONGE-CCDM FAN	1	SNA	
14		JC73-00215A	RUBBER-DAMPER HDD	4	SA	
15		JC31-00085A	FAN-DC	1	SA	
16		JC72-01403A	SPONGE-GUIDE OUTPUT	2	SNA	
17		JC61-00667A	STOPPER-M-FAN80	2	SA	
18		JC96-04918A	ELA HOU-SCAN MOTOR	1	SA	
18-1		6003-000269	SCREW-TAPTITE	2	SNA	
18-2		6044-000125	RING-E	1	SNA	
18-3		JC31-00104A	MOTOR STEP	1	SNA	
18-4		JB66-00083A	GEAR-IDLE	1	SNA	
18-5		JB72-00764A	PMO-HOLDER BELT	1	SNA	
18-6		JC61-00895A	BRACKET-SCAN MOTOR R2	1	SNA	
18-7		JC66-00530A	GEAR-REDUCTION73/37	1	SNA	
18-8		JC66-00531A	GEAR-TIMING	1	SNA	
19		JC39-01007A	HARNESS-SCAN_MOTOR	1	SNA	
20		JC39-00887A	HARNESS-F_COVER_OPEN	1	SA	
21		JC63-01704A	GROUND-HINGE SCAN	1	SNA	
22		JC63-01707A	GROUND-SCAN LOWER	1	SNA	
23		JC72-00755A	PMO-LEVER SENSOR	1	SA	
24		6107-001135	SPRING-CS	1	SA	
25		JC96-03819A	ELA HOU-CCDM_2905	1	SA	
26		JC63-02808A	COVER-SCAN LOWER DMY	1	SNA	
27		JB70-00145A	ICT-SHAFT CCD	1	SNA	
28		JC39-01002A	FLAT CABLE	1	SNA	
29		6602-001067	BELT-TIMING GEAR	1	SA	
30		JB61-00059A	SPRING ETC-BELT	1	SA	
31		6044-000125	RING-E	1	SA	
32		JB72-00764A	PMO-HOLDER BELT	1	SA	
33		JB72-00763A	PMO-PULLEY	1	SA	
34		JB70-00154A	ICT-INSERT SHAFT	1	SNA	
35		6003-000196	SCREW-TAPTYPE	12	SA	

7.3 ELA HOU-DADF

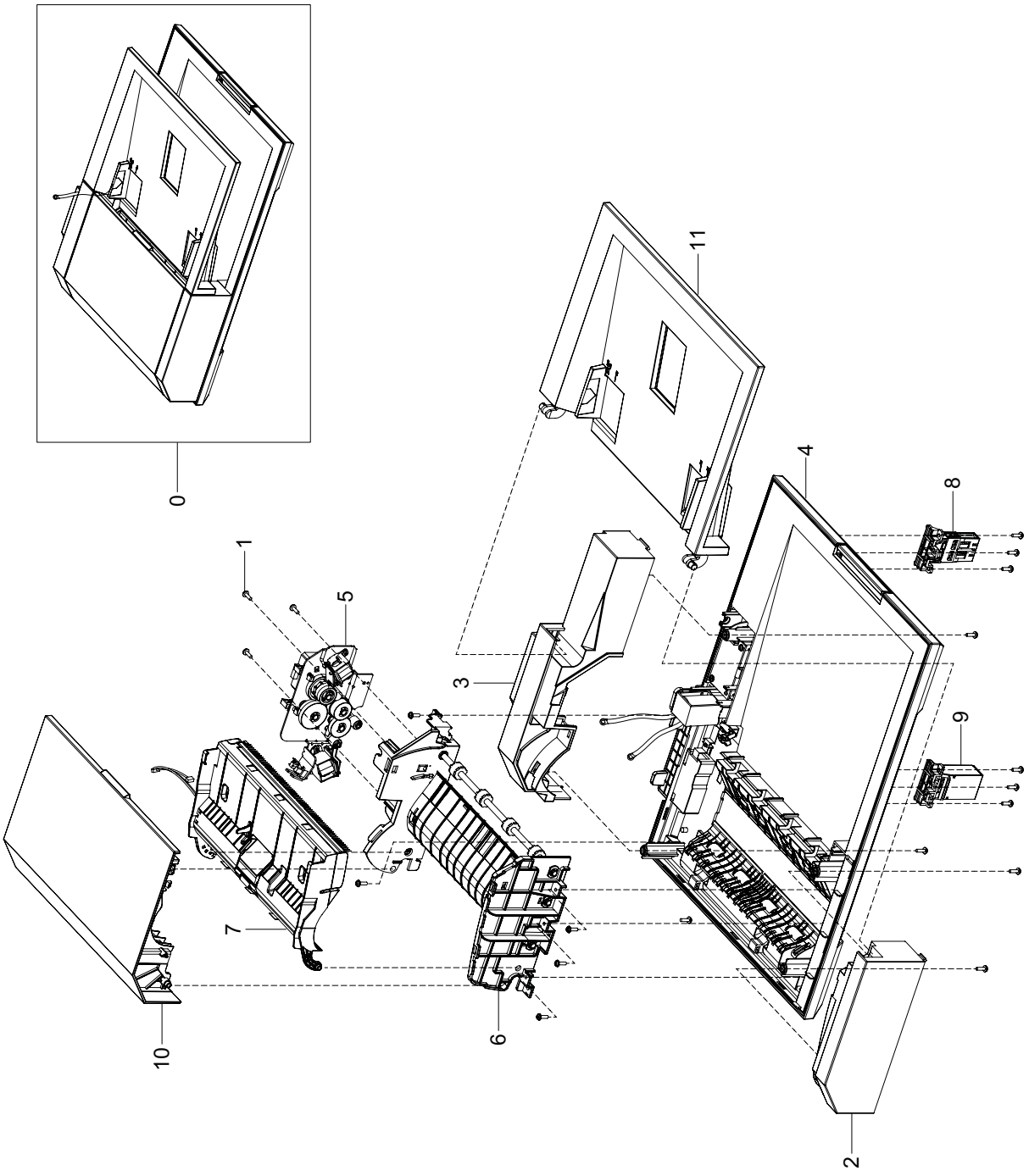

ELA HOU-DADF Parts List

SA : SERVICE AVAILABLE, SNA : SERVICE not AVAILABLE

Drawing#	Dell_ code	SEC_code	Description	Qty	Service	Remark
0	KW451	JC96-05184A	ELA HOU-DADF	1	SA	
1		6003-000196	SCREW-TAPTITE	19	SNA	
2		JC63-01807A	COVER-DADF FRONT	1	SNA	
3		JC63-01809A	COVER-DADF REAR	1	SNA	
4		JC96-05183A	ELA HOU-COVER PLATEN	1	SNA	
5		JC96-05185A	ELA HOU-DADF DRV	1	SNA	
6		JC96-05186A	ELA HOU-DADF LOWER	1	SNA	
7		JC96-05187A	ELA HOU-DADF UPPER	1	SNA	
8		JC97-02779B	MEA UNIT-HINGE	1	SNA	
9		JC97-03038B	MEA UNIT-HINGE DADF	1	SNA	
10		JC97-03279A	MEA UNIT-COVER OPEN	1	SNA	
11		JC97-03421A	MEA UNIT-STACKER TX	1	SNA	

7.3.1 ELA HOU-COVER PLATEN

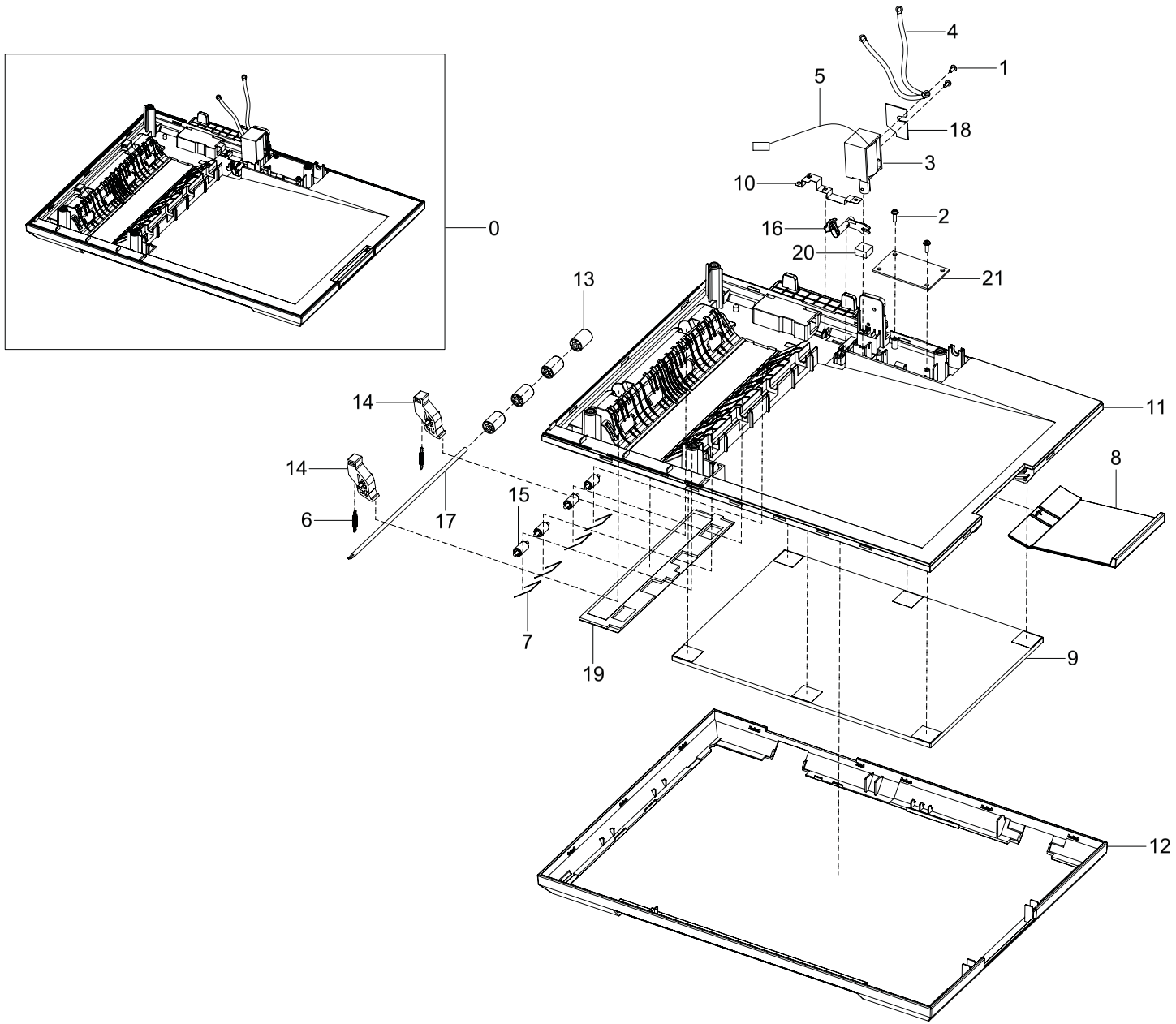

ELA HOU-COVER PLATEN Parts List

SA : SERVICE AVAILABLE, SNA : SERVICE not AVAILABLE

Drawing#	Dell_ code	SEC_code	Description	Qty	Service	Remark
0		JC96-05183A	ELA HOU-COVER PLATEN	1	SNA	
1		6001-000130	SCREW-MACHINE	2	SNA	
2		6003-000196	SCREW-TAPTITE	2	SNA	
3		JC33-00031A	SOLENOID-LIFTING	1	SNA	
4		JC39-00892A	HARNESS-DADF GND	1	SNA	
5		JC39-01008A	HARNESS-DADF	1	SNA	
6		JC61-02427A	SPRING ETC-FEED IDLE	2	SNA	
7		JC61-02429A	SPRING ETC-MID IDLE	4	SNA	
8		JC61-02534A	GUIDE-EXTENSION	1	SNA	
9		JC63-00209A	SHEET-WHITE SPONGE	1	SNA	
10		JC63-01660A	GROUND-PLATEN	1	SNA	

Drawing#	Dell_ code	SEC_code	Description	Qty	Service	Remark
11		JC63-01820A	COVER-PLATEN	1	SNA	
12		JC63-01821A	COVER-PLATEN BAND	1	SNA	
13		JC66-01022A	ROLLER-M_IDLE SCF	4	SNA	
14		JC66-01749A	LEVER-JAM_FEED	2	SNA	
15		JC66-01764A	ROLLER-IDLE	4	SNA	
16		JC66-01774A	LEVER-LIFTING_EXIT	1	SNA	
17		JC66-01817A	SHAFT-FEED IDLE	1	SNA	
18		JC69-01327A	PAD-SOLENOID	1	SNA	
19		JC72-01439A	SPONGE-DADF PLATEN	1	SNA	
20		JC72-01471A	SPONGE-DADF LIFTING	1	SNA	
21		JC92-01954A	PBA-DADF	1	SNA	

7.3.2 ELA HOU-DADF DRV

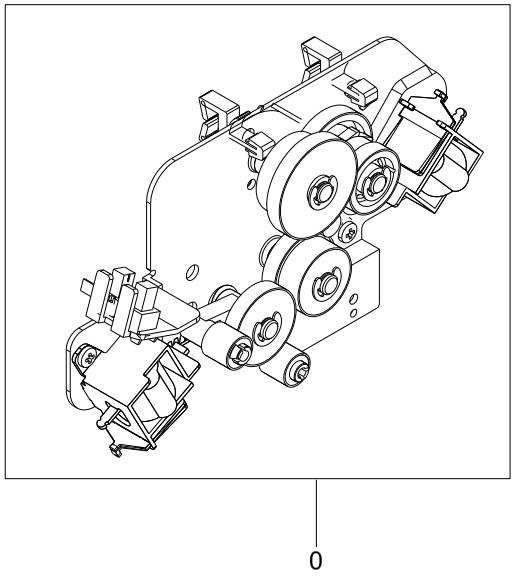

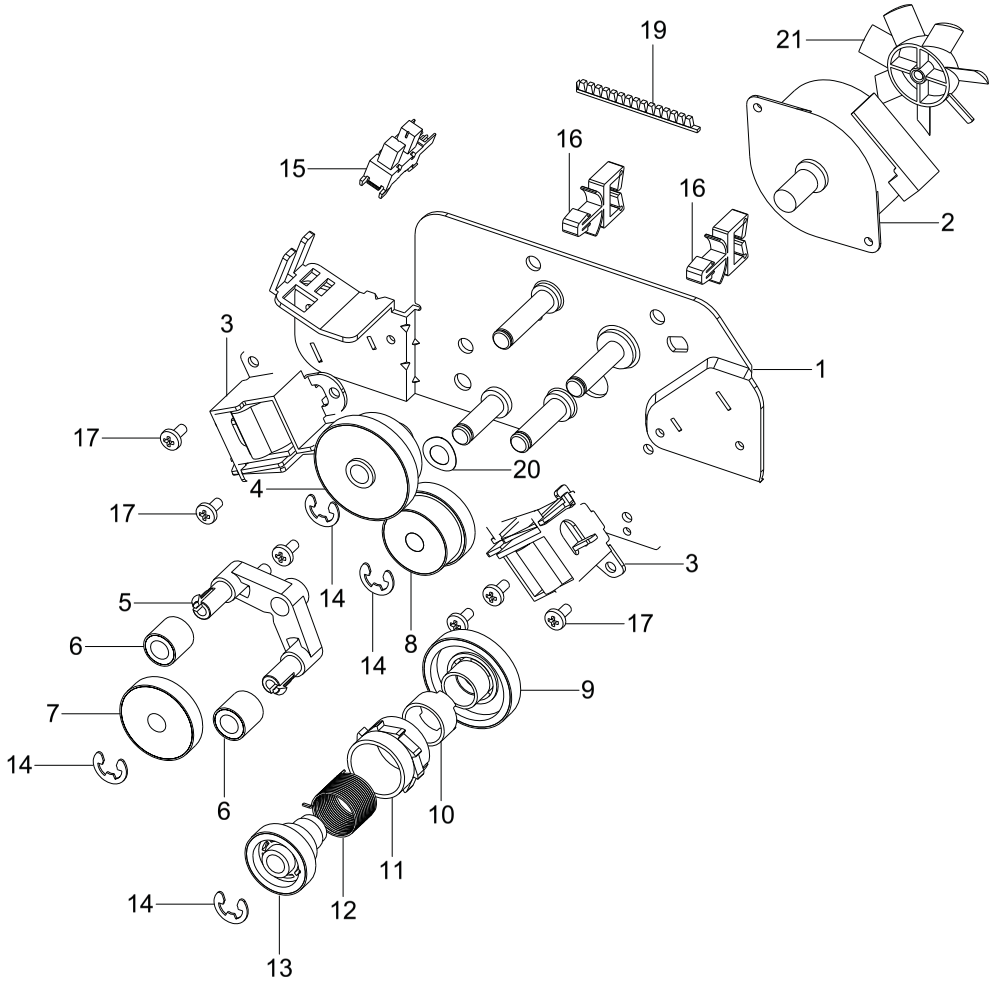

ELA HOU-DADF DRV Parts List

SA : SERVICE AVAILABLE, SNA : SERVICE not AVAILABLE

Drawing#	Dell_ code	SEC_code	Description	Qty	Service	Remark
0		JC96-05185A	ELA HOU-DADF DRV	1	SA	
1		JC61-02386B	BRACKET-DRIVE DADF	1	SNA	
2		JC31-00116A	MOTOR STEP	1	SNA	
3		JC33-00030A	SOLENOID-DADF	2	SA	
4		JC66-01758A	GEAR-PICKUP IDLE	1	SA	
5		JC61-02278A	BRACKET-SWING	1	SNA	
6		JC66-01753A	GEAR-FEED IDLE B	1	SA	
7		JC66-01754A	GEAR-FEED IDLE C	2	SA	
8		JC66-01752A	GEAR-FEED IDLE A	1	SA	
9		JC66-01759A	GEAR-PICKUP IDLE LOW	1	SA	
10		JC61-04040A	BUSH-SPRING CLUTCH	1	SNA	

Drawing#	Dell_ code	SEC_code	Description	Qty	Service	Remark
11		JC61-02240A	COLLAR-PICKUP	1	SNA	
12		6107-001171	SPRING-TS	1	SA	
13		JC66-01760A	GEAR-PICKUP IDLE UP	1	SA	
14		6044-000231	RING-E	4	SA	
15		0604-001095	PHOTO-INTERRUPTER	1	SA	
16		6502-000132	CABLE CLAMP	2	SNA	
17		6003-000269	SCREW-TAPTYPE	6	SNA	
20		JF70-10616A	IPR-WASHER SPRING CU	1	SNA	
21		JC66-00556A	IMPELLER-ADF	1	SA	
20		6302-001056	GASKET	0.13	SNA	
21		JF70-10616A	IPR-WASHER SPRING CU	1	SNA	

7.3.3 ELA HOU-DADF LOWER

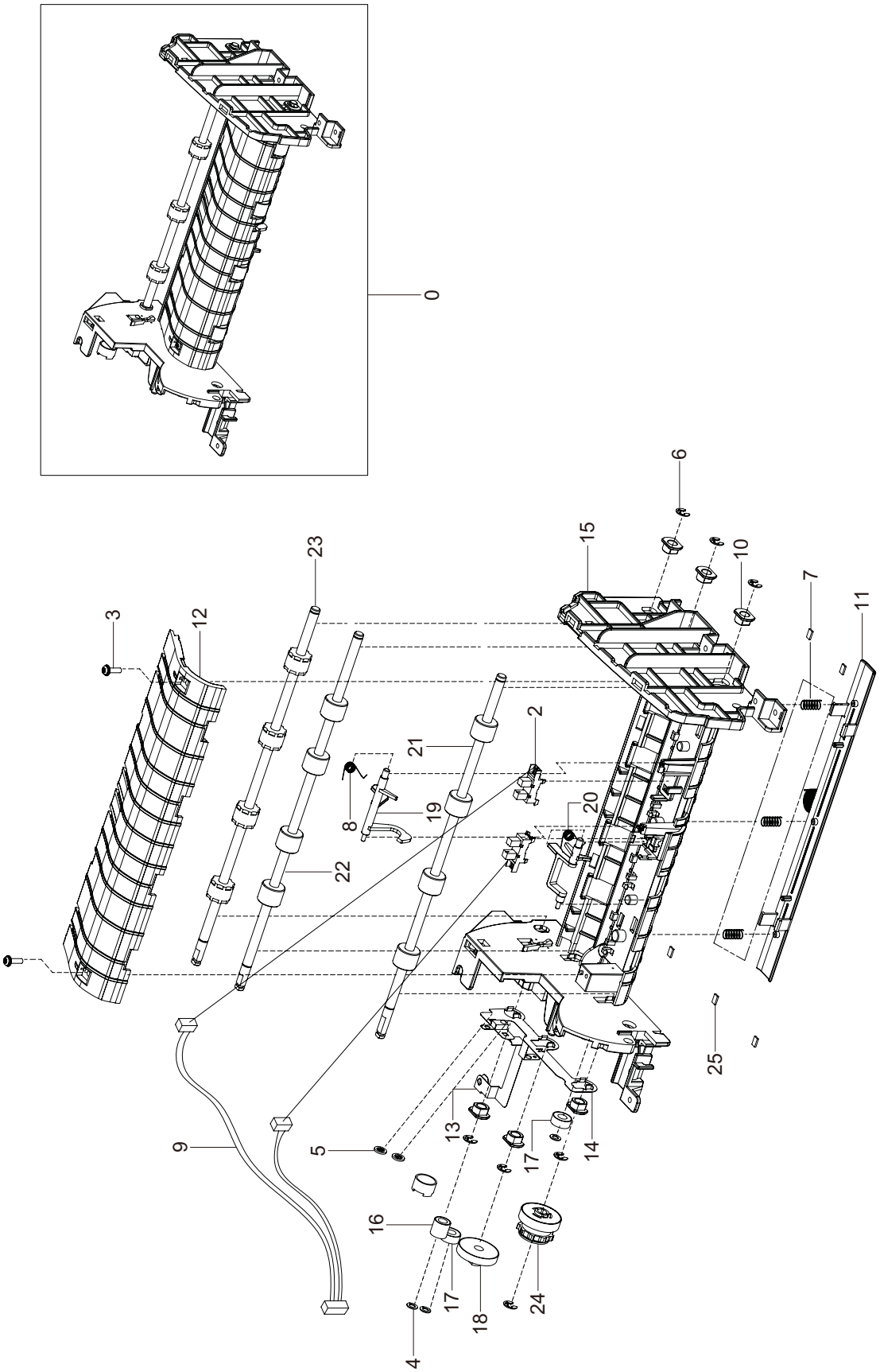

ELA HOU-DADF LOWER Parts List

SA : SERVICE AVAILABLE, SNA : SERVICE not AVAILABLE

Drawing#	Dell_ code	SEC_code	Description	Qty	Service	Remark
0		JC96-05186A	ELA HOU-DADF LOWER	1	SNA	
1		0205-001080	GREASE-BEARING	0.5	SNA	
2		0604-001095	PHOTO-INTERRUPTER	2	SNA	
3		6003-000196	SCREW-TAPTITE	2	SNA	
4		6031-001584	WASHER-PLAIN	3	SNA	
5		6044-000001	RING-CS	2	SNA	
6		6044-000125	RING-E	7	SNA	
7		6107-001135	SPRING-CS	3	SNA	
8		JB61-00076A	SPRING ETC-TORSION DOC (CC2-F)	2	SNA	
9		JC39-00853A	HARNESS-DADF SENSOR 1	1	SNA	
10		JC61-00423A	BUSH-6_D	6	SNA	
11		JC61-01179A	PLATE-M_WHITE BAR	1	SNA	

Drawing#	Dell_ code	SEC_code	Description	Qty	Service	Remark
12		JC63-01597C	COVER-DADF_MIDDLE	1	SNA	
13		JC63-01661A	GROUND-DADF	1	SNA	
14		JC63-01662A	GROUND-FEED EXIT	1	SNA	
15		JC63-01808A	COVER-DADF LOWER	1	SNA	
16		JC66-01754A	GEAR-FEED IDLE C	1	SNA	
17		JC66-01755A	GEAR-FEED IDLE D	2	SNA	
18		JC66-01757A	GEAR-EXIT	2	SNA	
19		JC66-01762A	ACTUATOR-REGI	1	SNA	
20		JC66-01766A	ACTUATOR-FEED	1	SNA	
21		JC66-01822A	ROLLER-MIDDLE	1	SNA	
22		JC66-01823A	ROLLER-FEED	1	SNA	
23		JC66-01824A	ROLLER-EXIT	1	SNA	
24		JC97-03085A	MEA-GEAR FEED	1	SNA	

7.3.4 ELA HOU-DADF_UPPER

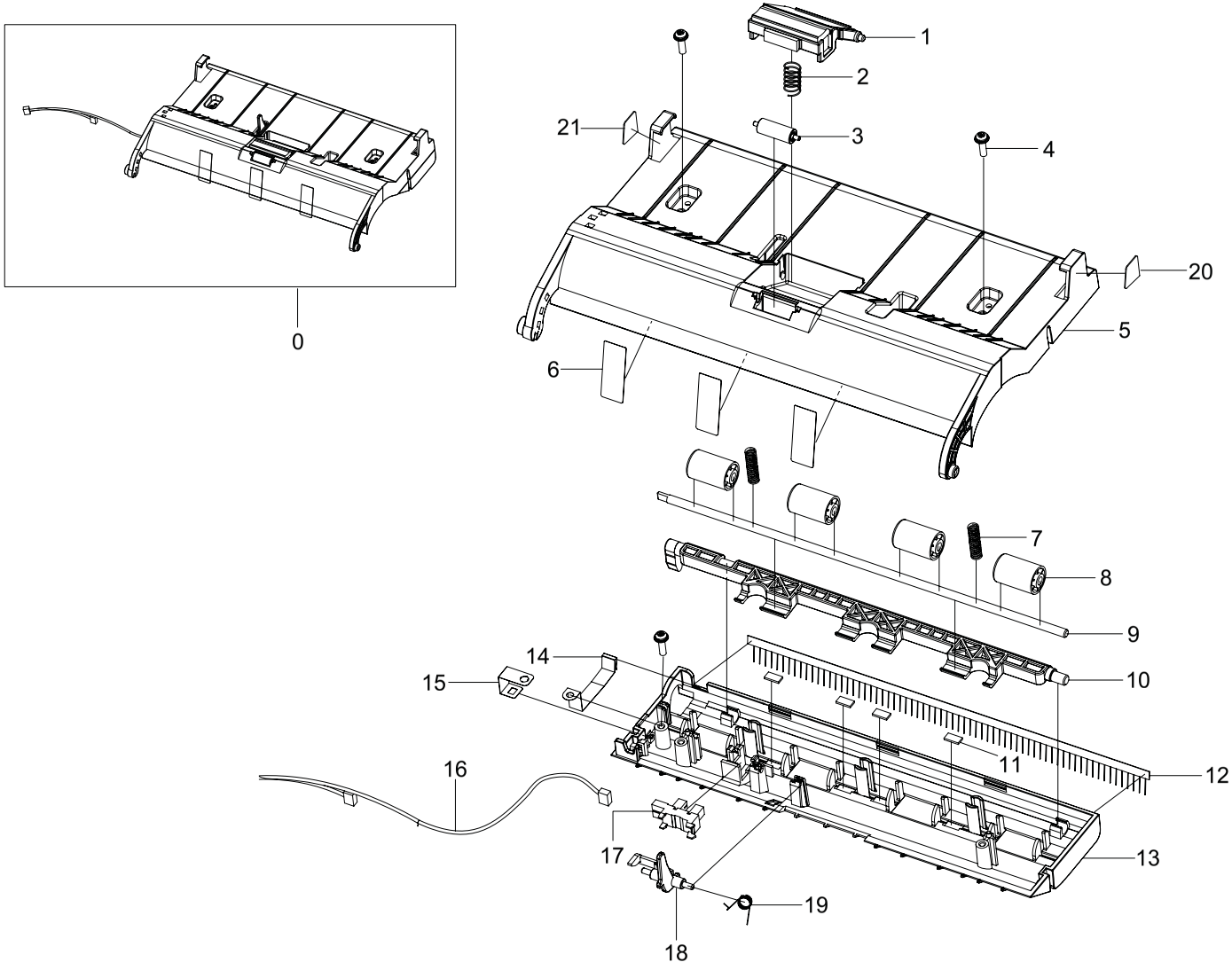

ELA HOU-DADF_UPPER Parts List

SA : SERVICE AVAILABLE, SNA : SERVICE not AVAILABLE

Drawing#	Dell_ code	SEC_code	Description	Qty	Service	Remark
0		JC96-05187A	ELA HOU-DADF UPPER	1	SNA	
1	KW462	JC97-03069A	MEA UNIT-DADF RUBBER	1	SA	
2		JC61-00387A	SPRING ETC-PAD	1	SNA	
3		JC66-00461A	ROLLER-M-ADF IDLE	1	SNA	
4		6003-000196	SCREW-TAPTITE	3	SNA	
5		JC63-01610C	COVER-DADF_UPPER TOP	1	SNA	
6		JC63-01776A	SHEET-PATH	3	SNA	
7		JC61-02428A	SPRING ETC-EXIT IDLE	2	SNA	
8		JC66-01022A	ROLLER-M_IDLE SCF	4	SNA	
9		JC66-01817A	SHAFT-FEED IDLE	1	SNA	
10		JC61-02252A	HOLDER-LIFTING_IDLE	1	SNA	
11		JC66-01876A	DAMPER-DADF UPPER	4	SNA	

Drawing#	Dell_ code	SEC_code	Description	Qty	Service	Remark
12		JC75-00095A	MEC-BRUSH ANTISTATIC	1	SNA	
13		JC63-01622C	COVER-DADF UPPER BT	1	SNA	
14		JC63-01664A	GROUND-BRUSH	1	SNA	
15		JC63-01663A	GROUND-DADF UPPER	1	SNA	
16		JC39-00853A	HARNESS-DADF SENSOR 1	1	SNA	
17		0604-001095	PHOTO-INTERRUPTER	1	SNA	
18		JC66-01765A	ACTUATOR-EMPTY	1	SNA	
19		JB61-00076A	SPRING ETC-TORSION DOC(CC2-F)	1	SNA	
20		JC68-02078B	LABEL-INFORMATION	1	SNA	
21		JC68-02079B	LABEL-INFORMATION	1	SNA	
22		JC39-00322A	CBF-HARNESS-SCAN GND	1	SNA	

7.3.5 MEA UNIT-HINGE DADF

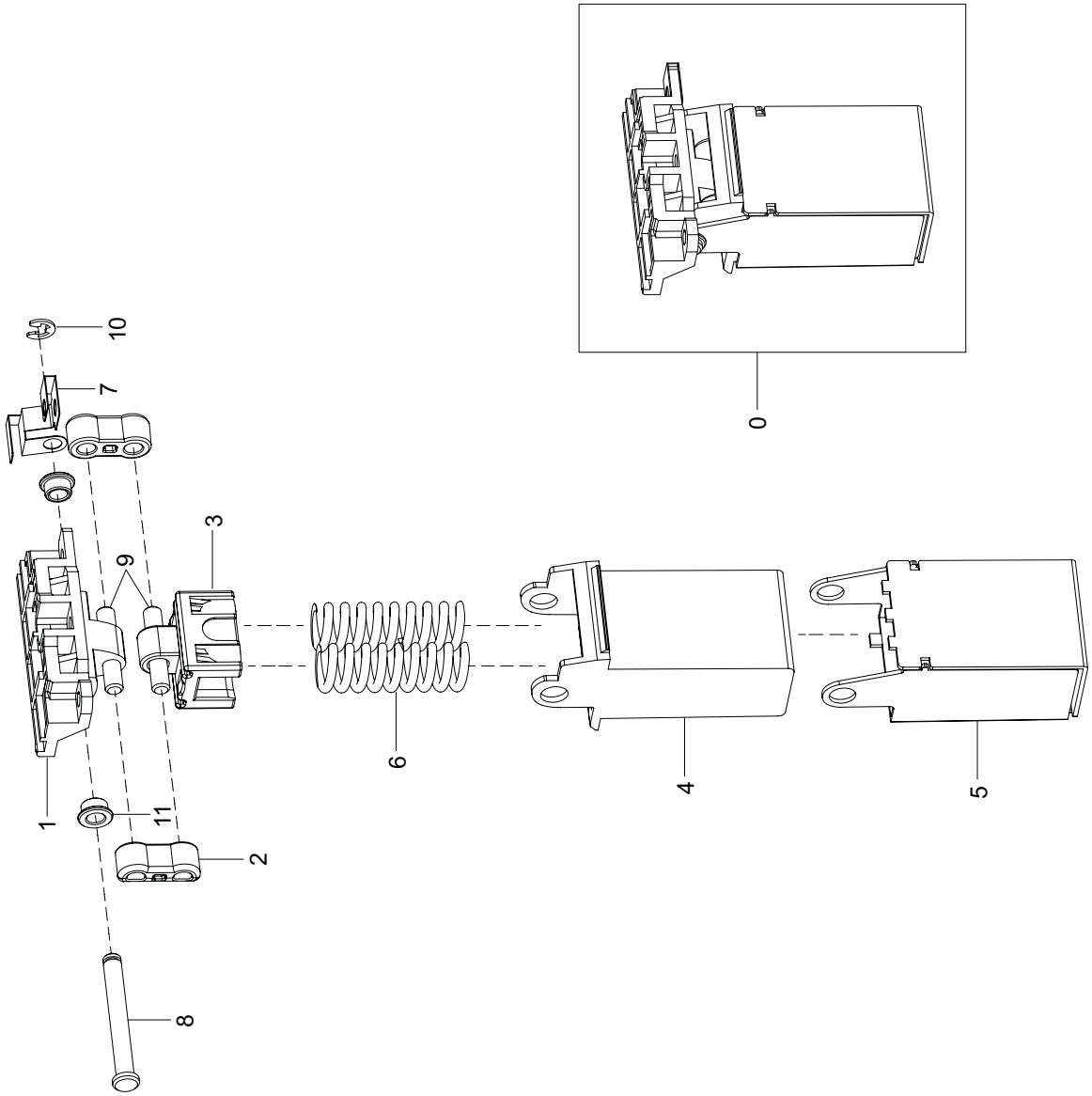

MEA UNIT-HINGE DADF Parts List

SA : SERVICE AVAILABLE, SNA : SERVICE not AVAILABLE

Drawing#	Dell_ code	SEC_code	Description	Qty	Service	Remark
0		JC97-03038B	MEA UNIT-HINGE_DADF	1	SNA	
1		JC61-02224B	HINGE-PLATEN	1	SNA	
2		JC61-01432A	HINGE-M_LINK L	2	SNA	
3		JC61-02223A	HINGE-SLIDER	1	SNA	
4		JC61-02248B	HINGE-SCAN	1	SNA	
5		JC61-02183A	HOUSING-HINGE_SCAN	1	SNA	

Drawing#	Dell_ code	SEC_code	Description	Qty	Service	Remark
6		6107-001354	SPRING-CS	2	SNA	
7		JC63-01568A	GROUND-HINGE	1	SNA	
8		JC66-01810A	SHAFT-HINGE	1	SNA	
9		JC66-01811A	SHAFT-LINK	2	SNA	
10		6044-000159	RING-C	1	SNA	
11		JC61-01686A	BUSH-4D_FE	2	SNA	

7.3.6 MEA UNIT-COVER OPEN

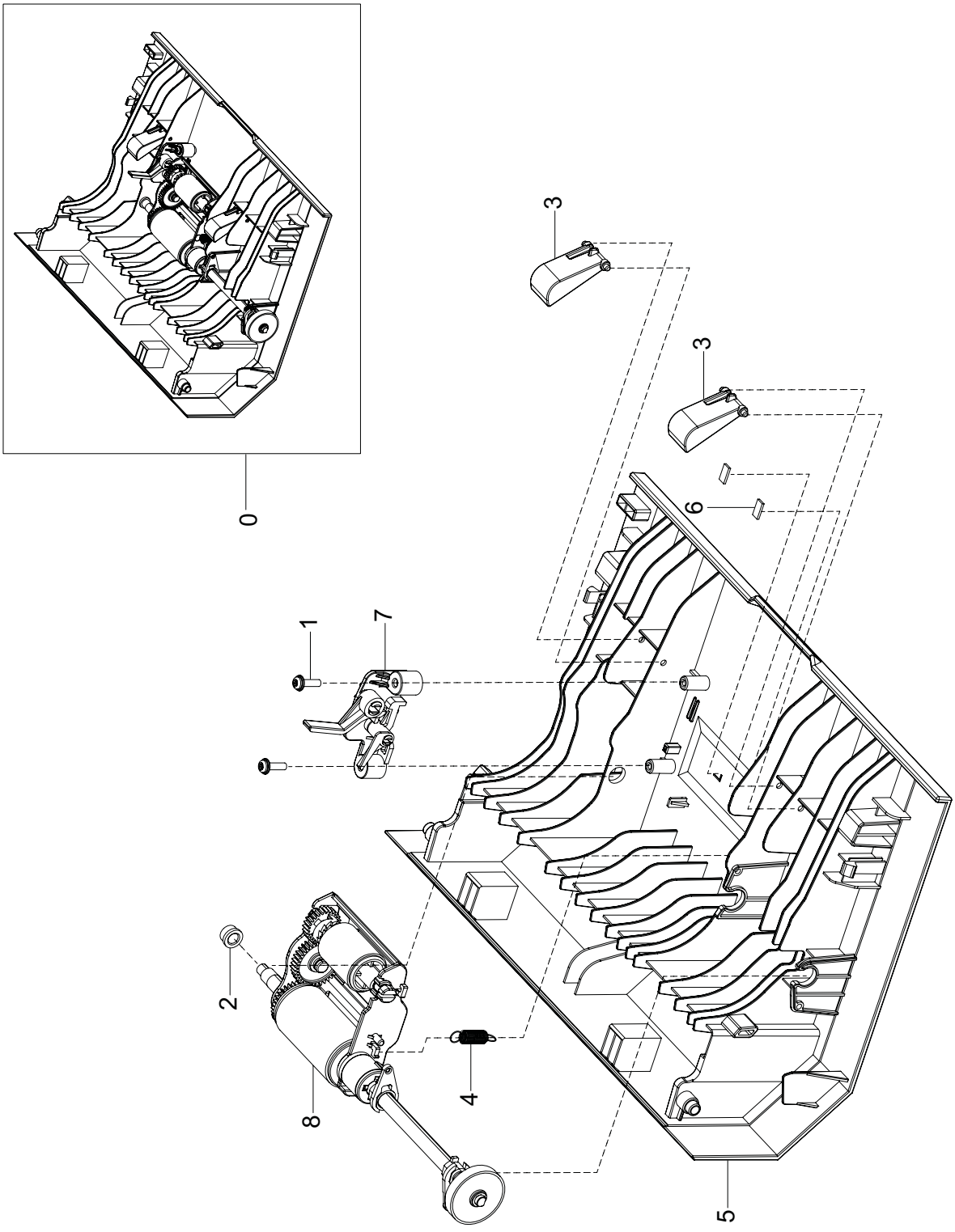

MEA UNIT-COVER OPEN Parts List

SA : SERVICE AVAILABLE, SNA : SERVICE not AVAILABLE

Drawing#	Dell_ code	SEC_code	Description	Qty	Service	Remark
0		JC97-03279A	MEA UNIT-COVER OPEN	1	SNA	
1		6003-000196	SCREW-TAPTITE	2	SNA	
2		JB72-00819A	PMO-BUSH	1	SNA	
3		JC61-00788A	GUIDE-M_DOC SENSOR	2	SNA	
4		JC61-02489A	SPRING ETC-PICKUP	1	SNA	
5		JC63-01819A	COVER-OPEN	1	SNA	
6		JC66-01876A	DAMPER-DADF UPPER	2	SNA	
7		JC97-03060A	MEA UNIT-STOPPER	1	SNA	
8	KW455	JC97-03070A	MEA UNIT-PICK UP DADF	1	SA	

7.3.7 MEA UNIT-STACKER TX

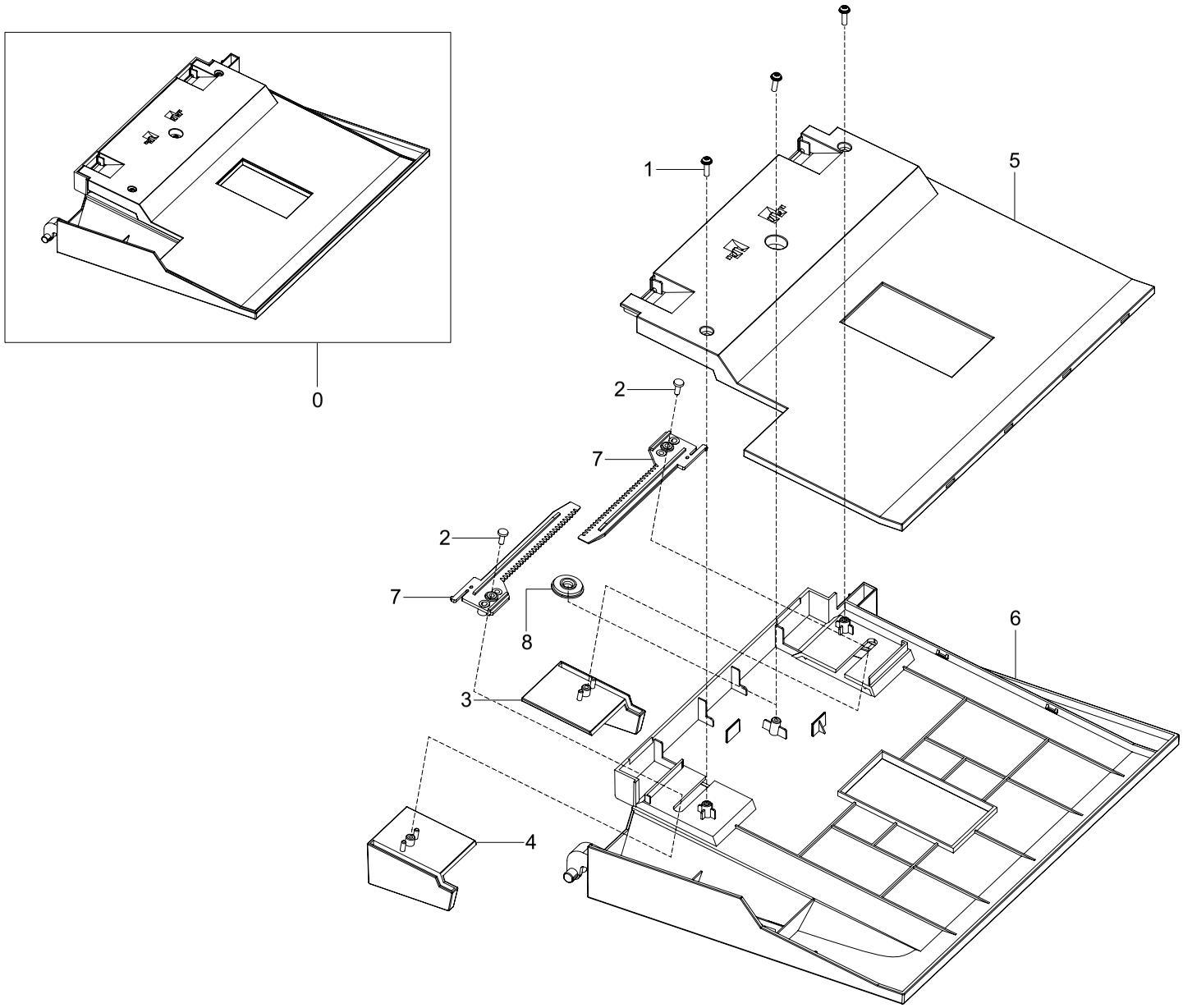

MEA UNIT-STACKER TX Parts List

SA : SERVICE AVAILABLE, SNA : SERVICE not AVAILABLE

Drawing#	Dell_ code	SEC_code	Description	Qty	Service	Remark
0		JC97-03421A	MEA UNIT-STACKER TX	1	SNA	
1		6003-000196	SCREW-TAPTITE	3	SNA	
2		6003-000282	SCREW-TAPTITE	2	SNA	
3		JC61-02532A	GUIDE-DOCU L	1	SNA	
4		JC61-02533A	GUIDE-DOCU R	1	SNA	
5		JC63-01822A	COVER-RACK	1	SNA	
6		JC63-01835A	COVER-STACKER TX	1	SNA	
7		JC66-01786A	SLIDER-DOCU GUIDE	2	SNA	
8		JG66-40003A	GEAR-PINION	1	SNA	
9		JC66-02103A	DAMPER-STACKER REAR	1	SNA	
10		JC66-02104A	DAMPER-STACKER FRONT	1	SNA	

8. CASSETTE

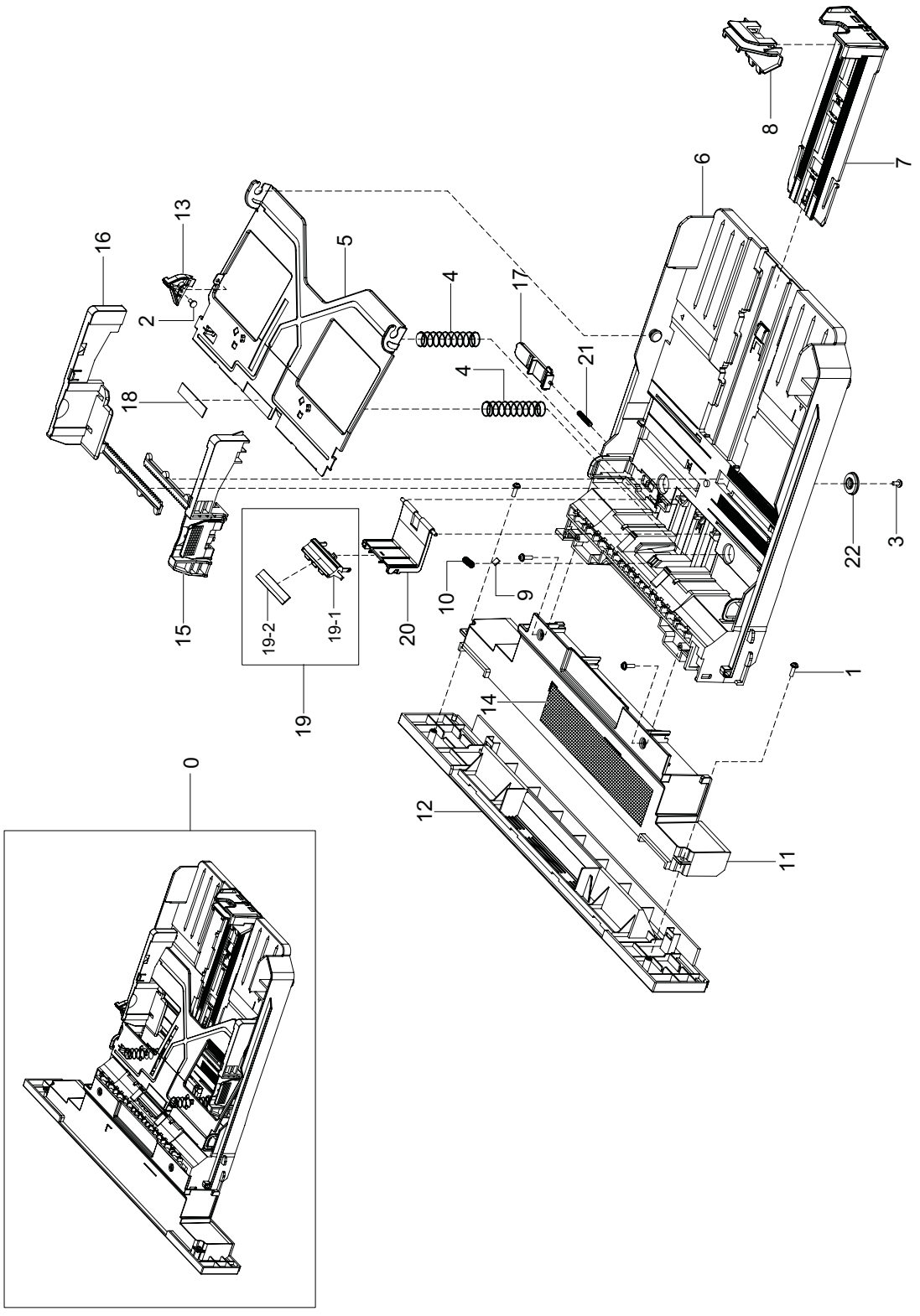

CASSETTE Parts List

SA : SERVICE AVAILABLE, SNA : SERVICE not AVAILABLE

Drawing#	Dell_ code	SEC_code	Description	Qty	Service	Remark
0		JC97-03277A	MEA UNIT-CASSETTE	1	SA	
1		6003-000196	SCREW-TAPTITE	4	SNA	
2		6003-000261	SCREW-TAPTITE	1	SNA	
3		6003-000264	SCREW-TAPTITE	1	SNA	
4		6107-001166	SPRING-CS	2	SNA	
5		JC61-00603A	PLATE-P-KNOCK_UP	1	SNA	
6		JC61-00876G	FRAME-M_CASSETTE	1	SNA	
7		JC61-02740A	GUIDE-EXTENSION L	1	SNA	
8		JC61-00960A	GUIDE-M-EXTEND S_DELL	1	SNA	
9		JC61-01692A	SUPPORT-HOLDER PAD	1	SNA	
10		JC61-70911A	SPRING ETC-EXIT ROLL FD	1	SNA	
11		JC63-01806A	COVER-CST DUMMY	1	SNA	
12		JC63-01836A	COVER-SUB CASSETTE	1	SNA	

Drawing#	Dell_ code	SEC_code	Description	Qty	Service	Remark
13		JC66-00719A	CAM-M-KNOCK UP	1	SNA	
14		JC68-02150A	LABEL-CAUTION	1	SNA	
15		JC70-00300G	ADJUST-M-CST L_DELL	1	SNA	
16		JC70-00301G	ADJUST-M-CST R_DELL	1	SNA	
17		JC72-00972A	PMO-PLATE_LOCKER	1	SNA	
18		JC73-00141A	RPR-PAD CASSETTE	1	SNA	
19		JC97-03439A	MEA UNIT-HOLDER PAD	1	SNA	
19-1		JC61-02733A	HOLDER-PAD	1	SNA	
19-2		JC73-00140A	RPR-FRICTION PAD	1	SNA	
20		JC61-01978A	HOUSING-HOLDER PAD	1	SNA	
21		JG61-70531A	SPRING ETC-LOCKER,PLATE	1	SNA	
22		JG66-40003A	GEAR-PINION	1	SNA	

9. ELA HOU-SCF

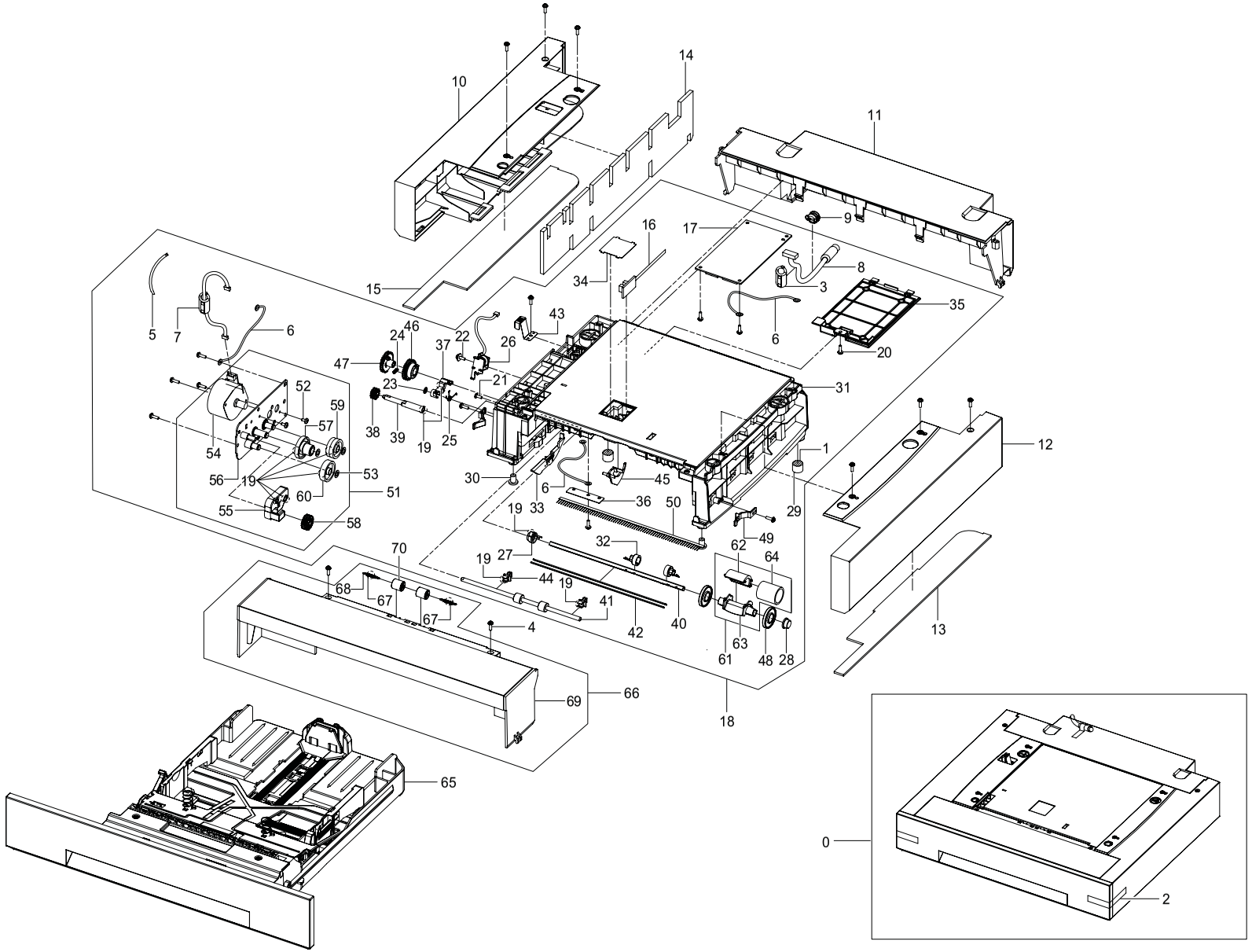
10
14
11
9
16
17
8
3
34
15
35
5
7
6
43
24
46
22
26
6
20
47
37
21
31
23
52
59
57
38
39
19
25
54
1
12
56
19
53
30
6
45
60
51
36
50
29
55
58
19
33
49
32
62
64
70
19
27
44
19
68
67
41
67
4
42
40
63
61
48
28
13
69
66
18
65
0
2

ELA HOU-SCF Parts List

SA : SERVICE AVAILABLE, SNA : SERVICE not AVAILABLE

Drawing#	Dell_ code	SEC_code	Description	Qty	Service	Remark
0	HT234	JC96-05180A	ELA HOU-SCF	1	SA	
1		3301-001635	CORE-FERRITE	1	SNA	
2		6003-000196	SCREW-TAPTITE	8	SNA	
3		6501-000004	CABLE TIE	1	SNA	
4		JC39-00366A	CBF HARNESS-SCF GND	3	SNA	
5		JC39-01003A	HARNESS-DUPLEX_MOTOR	1	SNA	
6		JC39-01012A	HARNESS-SCF	1	SNA	
7		JC61-00804A	BUSH-CABLE	1	SNA	
8		JC63-01815A	COVER-LEFT SCF	1	SNA	
9		JC63-01824A	COVER-REAR SCF	1	SNA	
10		JC63-01825A	COVER-RIGHT SCF	1	SNA	
11		JC72-01468A	SPONGE-SCF R	1	SNA	
12		JC72-01469A	SPONGE-SCF L1	1	SNA	
13		JC72-01470A	SPONGE-SCF L2	1	SNA	
14		JC92-01799B	PBA-SUB_SCF_EMP	1	SNA	
15		JC92-02034B	PBA-SCF	1	SNA	
16		JC96-05190A	ELA HOU-FRAME SCF	1	SNA	
17		6003-000196	SCREW-TAPTITE	11	SNA	
18		6003-000282	SCREW-TAPTITE	1	SNA	
19		6006-001078	SCREW-TAPTITE	1	SNA	
20		6044-000001	RING-CS	1	SNA	
21		6107-001167	SPRING-CS	1	SNA	
22		6107-001170	SPRING-TS	1	SNA	
23		JC33-00025B	SOLENOID-MANUAL	1	SNA	
24		JC61-00586A	BUSH-M-PICK_UP L	1	SNA	
25		JC61-00587A	BUSH-M-PICK_UP R	1	SNA	
26		JC61-00835A	FOOT-BACK	2	SNA	
27		JC61-00836A	FOOT-FRONT	2	SNA	
28		JC61-00877G	FRAME-M_SCF	1	SNA	
29		JC61-00915A	STOPPER-M-PICK UP_R2	2	SNA	

Drawing#	Dell_ code	SEC_code	Description	Qty	Service	Remark
30		JC61-00937A	GUIDE-M-KNOCK UP	1	SNA	
31		JC63-00369A	SHEET-COVER SENSOR	1	SNA	
32		JC63-00492D	COVER-M_SIMM	1	SNA	
33		JC63-00527A	SHEET-BRUSH	1	SNA	
34		JC66-00377A	CAM-M-PICK_UP	1	SNA	
35		JC66-00394A	GEAR-FEED 2	1	SNA	
36		JC66-00398A	SHAFT-FEED	1	SNA	
37		JC66-00399A	SHAFT-P-PICK_UP	1	SNA	
38		JC66-00598A	ROLLER-FEED	1	SNA	
39		JC66-00720A	SHAFT-P-CORE	2	SNA	
40		JC70-11028A	IPR-GROUND TOP	1	SNA	
41		JC72-00382B	PMO-BUSHING FEED	2	SNA	
42		JC72-00975A	PMO-ACTUATOR EMPTY	1	SNA	
43		JC72-00979A	PMO-GEAR PICK_UP A	1	SNA	
44		JC72-00980A	PMO-GEAR PICK_UP B	1	SNA	
45		JC72-00982A	PMO-IDLE PICK_UP	2	SNA	
46		JC72-00983A	PMO-LOCKER CST	2	SNA	
47		JC75-00095A	MEC-BRUSH ANTISTATIC	0.25	SNA	
48		JC96-05140A	ELA HOU-MOTOR SCF	1	SNA	
49		6001-000131	SCREW-MACHINE	2	SNA	
50		6031-000023	WASHER-PLAIN	3	SNA	
51		JC31-00084B	MOTOR STEP	1	SNA	
52		JC61-00878A	BRACKET-M_FEED SCF	1	SNA	
53		JC61-00881A	BRACKET-P_GEAR SCF	1	SNA	
54		JC66-00389A	GEAR-RDCN 57/18	1	SNA	
55		JC66-00396A	GEAR-IDLE 23	1	SNA	
56		JC66-00688A	GEAR-61/47 IDLE	1	SNA	
57		JC66-00690A	GEAR-35 IDLE	1	SNA	
58		JC97-01926A	MEA UNIT-PICK UP	1	SNA	
59		JC61-00909A	HOUSING-M-PICK UP_R2	1	SNA	

ELA HOU-SCF Parts List

SA : SERVICE AVAILABLE, SNA : SERVICE not AVAILABLE

Drawing#	Dell_ code	SEC_code	Description	Qty	Service	Remark
60		JC61-00910A	HOUSING-M-PICK UP2_R2	1	SNA	
61		JC72-01231A	SPONGE-ROLLER PICK_UP	1	SNA	
62		JC97-03278A	MEA UNIT-CASSETTE SCF	1	SNA	
63		JC97-03280A	MEA-COVER FRONT SCF	1	SNA	

Drawing#	Dell_ code	SEC_code	Description	Qty	Service	Remark
64		6107-001047	SPRING-ES	2	SNA	
65		JC63-01813A	COVER-FRONT SCF	1	SNA	
66		JC66-00529A	ROLLER-M-IDLE FEED	2	SNA	